RETROFITTING RESILIENCE INTO BUILDINGS IN A MIXED HUMID CLIMATE

Sarah Buffaloe, Assoc. AIA, LEED AP BD+C, Paul Totten, PE, LEED AP

ABSTRACT

All over the world, weather patterns are changing. In many places, extreme hot and cold temperatures are being experienced by people and buildings not acclimated to the changes. As building codes lag behind in adapting to climate change there are unique building enclosure failures occurring as a result of changing temperature extremes. In the mixed humid climate of the mid-Atlantic region, unique building enclosure failures related to climate change include an increase in condensation issues as a result of record lows in the region over recent winters. This case study explores condensation issues related to extreme cold for a typical large multi-family residential building and proposes a retrofitted, cost-effective solution in the form of a passive heat fin. The study uses primary data to identify risk parameters, thermal 2-D modeling to design a targeted solution, then verifies the design by installing sensors and monitoring against real-world results. This paper will discuss how conduction, convection, radiation and diffusion all play a role in the way that moisture and heat are transferred and moved based on a passive heat fin.

As the climate continues to change, it is conceivable that many buildings will experience similar issues as they are based on codes that do not account for our current climate and future climate experience. For building owners simple solutions that can be deployed on large scales are more economical than tearing down and rebuilding. Retrofitted solutions that increase the resiliency of buildings will be a key component to keeping existing building stock functional.

INTRODUCTION

Performance of a building enclosure can degrade for a number of reasons, increasingly the industry is noticing a trend where materials and assemblies typically constructed in a region are no longer providing the expected level of thermal resistance, air tightness or water shedding. Since regional construction methods remain relatively unchanged the conclusion is drawn is that the materials and assemblies cannot keep pace with changes in the environment and construction quality variables. Both new and existing buildings are vulnerable to environmental changes and the impact increasing storms, temperature fluctuations, and extreme weather of all kinds have on a building exterior. Developing low cost effective retro-fits for the issues facing the built environmental will become more and more critical to creating a resilient building stock locally, regionally, and globally. In the Mid-Atlantic region the trend is toward colder winters, hotter summers, and increased humidity loads over the year. For one newly constructed multi-family residential complex, issues with excessive moisture and ice on the interior of window sills has been caused by extreme climate conditions, systemically deficient construction methods, and product testing that did not adequately measure

the performance of the assembly in place.

Changes to Climate

The planet's climate will continue to evolve, impacted by our use of the surrounding environment, how we build, and where populations migrate. These changes impact ocean currents, which in turn change weather patterns. These changes in weather patterns then affect all types of infrastructure, including buildings. For example, use of certain materials and colors can increase heat pick-up, development patterns and shapes of buildings can alter wind flow, and increased cloud cover can impact radiation due to reflection. Historic data has shown that the rate of change in the climate has quickened[i]; it now outpaces development of building code to the point of building performance degradation. There is little consensus on how best to accurately provide good guidance for designing with current climate data. In many ways the current code in most parts of the United States does not accurately depict the weather that climate zone is experiencing. This is due to how codes and standards are developed utilizing laborious and long consensus and adoption processes. Even if current code has been adopted, there is still a time lag in the climate data. Thus, designers and builders are building to an outdated set of climate data. In some climate zones this will have minimal impact based on limited differences in new climate norms compared to historic data. However, in others, these new extremes make a significant impact in how the building enclosure design will respond to the new climate norm. Coupled with the climate, the vast array of building enclosure systems and materials we can build with and the cost to construct new construction economically create conditions where buildings are experiencing increased risk for moisture and heat transfer issues. Although these issues have been present for many years, the combination of the climate, cost and material range factors have created a higher risk for building enclosure tie-ins and systems experiencing heat flow and moisture flow failures, especially in residential construction where cost is highly influential and code requirements are less stringent.

Workmanship and Performance

Unrelated to climate, poor quality control in construction continues to be a challenge for reasons related to schedule, budget, and complexity. Considering the pace at which the industry tends to build, quality can often be traded out for meeting schedule. Mis-installed or poorly tooled sealants or mis-lapped air barrier membrane can not only allow water infiltration, but also uncontrolled air flow that, especially during heightened wind, can undermine thermal performance of fenestration products. This in and of itself can undermine fenestration performance by allowing air to traverse across locations of thermal breaks in the fenestration and thus undermine the systems thermal performance. For example, uncontrolled air flow from a mis-tooled sealant joint can become critical on the windward side of a building where wind washing effect can creates frosting that occurs on the inside, usually evidenced by unusual ice build-up patterns. This can help those trying to understand the reasons for condensation on the window product to see if another influencing force besides interior to exterior heat flow may be at play. Constructability reviews, analysis of window placement, mock-ups with instrumentation, training of the trades and better project oversight can help reduce the risk of outliers and offer better means to solve issues before they happen, but are not currently in widespread use in the United States.

Performance Testing Falls Short

The case study depicted in this article faces challenges from both a rapidly changing climate and deficiencies during construction due to product selection and installation. Over the course of one year on this newly constructed property, residents observed and reported water on and around window sills throughout the building. Condensation is caused by warm moisture laden air coming in contact with a colder surface and falling below the dew point, or frost point when ice is formed. In photographs provided as part of this project, this moisture varies from droplets, to pools, to ice on window frames and sills. The occurrence of moisture was seemingly random across the property. The types and locations of condensation in the subject property did not have a defining distinct pattern based on elevation or location within the building. Generally, condensation on window frames can be due to many factors that can drive issues such as:

1) Window placement within the wall, especially differences in placement to meet the architectural requirements.

2) Construction quality.

3) Impact of wind washing on facade based on shape of building(s) on case study site and adjacent new development.

4) HVAC layout that may change from unit to unit.

5) How the unit owner or renter operates and conditions the space varies. Measured RH in units experiencing condensation varied but was often within the range of 20%-35% under normal residential use without mechanical humidification.

The building industry has developed specific standards to test the assembly performance of windows. The accepted standard that addresses condensation is American Architectural Manufacturer's Association (AAMA) 1503.1 – Voluntary Test Method for Thermal Transmittance and Condensation Resistance of Windows, Doors, and Glazed Wall Sections. This test measures thermal characteristics of glazed window and door assemblies under steady state controlled conditions. A Condensation Resistance Factor (CRF) is determined using the thermal conductance, thermal transmittance, thermal resistance, and air infiltration rate. The stated goal of the test is to create a metric of comparison across different products using a replicable test method. The standard states that there is " … no effort to impose or account for the effect of water vapor flow through or into the specimen during the test." Further, the standard recognizes that other factors such as wall construction, location of thermal break, drapes or shades, pressurization, wind velocity, and location of heat sources influence the thermal transmittance performance of the product. It is not the intent of standard AAMA 1503.1 to provide indication of installed performance of the window or door, only to provide a means of comparing the relative risk of condensation across products. It is therefore inappropriate to rely on CRF values alone to determine if an assembly design will perform. CRF should be a starting point, with higher values being better.

There are of course other standards designed to test various performance aspects of a glazed product. In this particular case study the glazed doors and windows met the performance requirements of the specifications, and yet did not perform once installed.

Table 1: Products Installed Testing Results for Air Leakage Rates

STANDARD	Tested Rate	Allowed Rate	Meets Requirement
ASTM E283-04 - Terrace Door	0.01 cfm/sf (1.5 L/s*m2)	0.30 cfm/sf	Yes
ASTM E283-04 - Sliding Door	0.10 cfm/sf (.5 L/s*m2)	0.30 cfm/sf	Yes
ASTM E283-04 - Picture Window	*0.003 cfm/sf (.015 L/s*m2*	0.30 cfm/sf	*Yes*
AAMA 1503.1-88 - Picture Window	*CRF of 58*		Yes
ASTM E283-04 - Single Hung Window	*0.08 cfm/sf (.41 L/s*m2)*	0.30 cfm/sf	*Yes*
AAMA 1503.1-88 - Single Hung Window	*CRF of 57/50*		

As seen in Table 1 the windows installed for this case study met the condensation resistance and air tightness performance criteria of the designer as written into project specifications as well as industry accepted testing standards and applicable building codes. While it is true that the windows selected for this project are not considered the highest performance they are considered standard for this region and construction type. Yet the in-situ performance did not meet expectations for the product and assembly.

METHODOLOGY

This analysis examines the condensation potential for an aluminum window at the sill reflecting the conditions experienced in-situ. The case study project is in a generally milder winter climate in the mid-Atlantic region of the United States. The window installed for this building represents typical construction and placement for nailing flange windows placed in a rough opening for multi-family residential this region.

We utilized a two-dimensional heat transfer software, THERM from Lawrence Berkeley National Laboratory, to complete the analysis of the window-to-wall interface. Using the heat transfer software we examined the risk of unconditioned exterior air entering at the window frame (outboard side) that can increase the times of day a window is more directly being influenced by colder temperatures that undermine the performance of the window and its thermal breaks. Also, we can use the model to examine misalignment of thermal breaks in the window product that for structural reasons in frame design may occur between a window and a receiver, or between a fixed frame and the operable portion as occurs on this project.

Design Condition

This residential building has a building facade consisting of brick masonry, metal panels, and punched aluminum framed openings. We started the THERM model with the as-designed condition as shown in Figure 1.

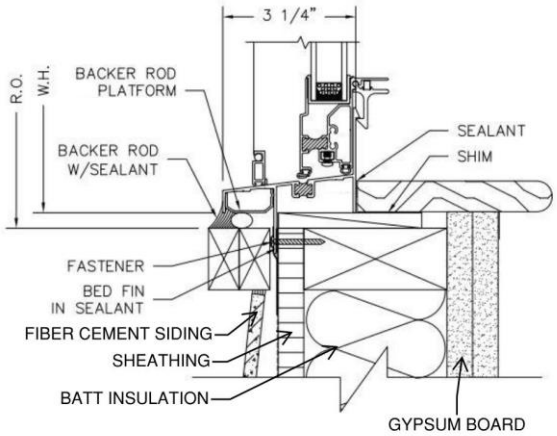

Figure 1: Typical window sill detail from construction documents

Modeling Parameters

Using the companion software to THERM, WINDOW an assembly was created to reflect the parameters of the product installed in the case study building.

1) Window Type:

   a. Single Hung Window with Backer Rod Platform, Glazing type G1

2) IGU Type 1

   a. Outer glazing- low e coating on surface #2 emissivity 0.034 at .1180 inches (0.299 cm)

   b. Air Layer - .6320 inches (1.605 cm)

   c. Inner glazing – Clear at .1250 inches (0.3175 cm)

The wall system modeled was made up of the following components from outside to inside:

1) Cementitious lapped siding

2) 5/8 inches(1.587 cm) Sheathing

3) 3 ½ inches (8.89 cm) Fiberglass batt insulation

4) 2 layers of 5/8 inch (1.587 cm) Wall Board

To accurately address the indoor and outdoor temperatures we examine local weather patterns. From our discussions with management and maintenance staff at the property we understand that the condensation issue has occurred for the past two years during winter months. This makes sense according to our THERM simulation which indicates that the window sill will condense when the exterior temperatures fall below 20°F (-6.67°C). In addition, according to historic climate data for the area the past two years have been colder than average, Figure 2 shows the temperature and dew point in Sterling, VA for 2014. The chart indicates that the

temperature were below 20°F (-6.67°C) frequently from November through March reaching an overall low of -2°F and that these temperatures are below normal for the area.

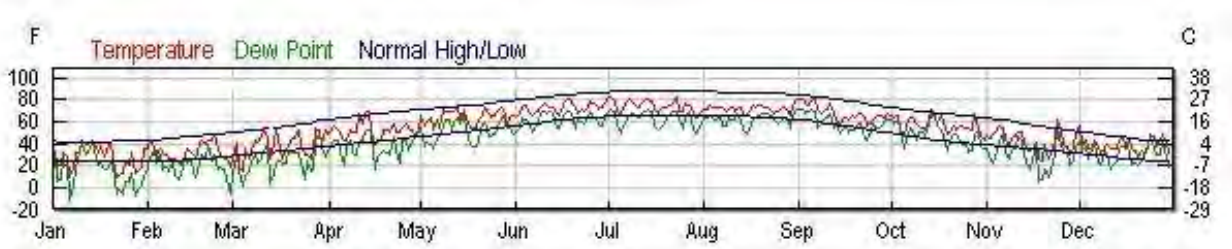

Figure 2: Temperature and Dew point data in Sterling, VA for 2014 when condensation issue was observed showing lowest temperatures of -2°F.

As a baseline, unless otherwise noted, the following conditions were used:

1) Exterior Temperature: 16.3°F (-8.72°C) (ASHRAE 2009 99.6% Heating season design temperature for Washington, DC)

Interior Temperature and Humidity: 72°F (22.22°C) and 35% relative humidity, the dew point temperature is calculated to be 42.8°F (6°C). 35% RH mimics a space with a slightly elevated moisture that can occur during showering, cooking and/or with a portable humidifier within a space.

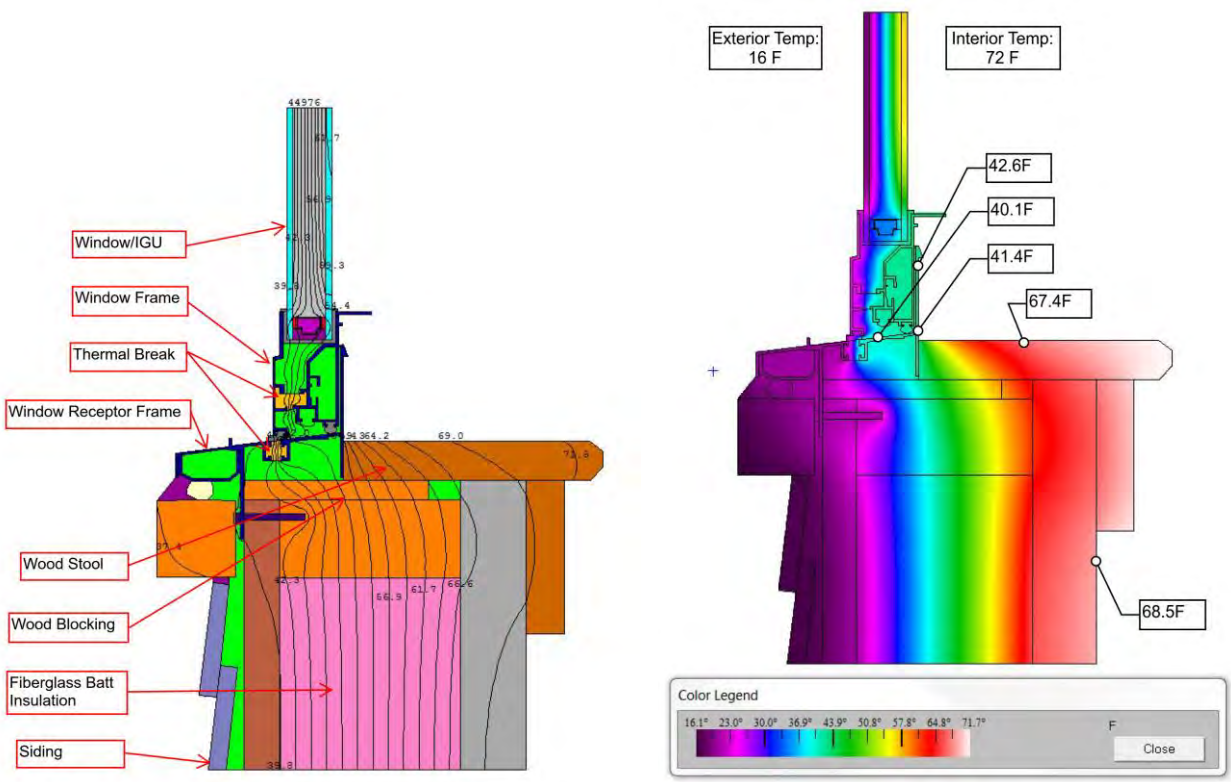

Figure 3: Material assembly and thermal transmittance results of baseline model showing potential for thermal bridging due to misaligned thermal break situated outboard of middle of wall thermal barrier, a common issue with nailing flange windows.

As can be seen in Figure 3, the interior window frame has the potential to form condensation where the frame meets the sill stool at 41.4°F (5.22°C), which is below the dew point of 42.8°F (6°C). The model shows the

issue of thermal alignment of the window's thermal break in relation to the wall assembly. Thermal alignment refers to the vertical plane of insulation in relation to the thermal break in the window frame, if the two are not in the same plane, or close to it, a thermal bypass is created. Misalignment of thermal breaks when combined with incidental air flow in the window frame might affect thermal performance of the window frame by creating two means of thermal bypass.

Creating a Heat Transfer Model to Mimic Defective Construction

During our site investigation, we found several locations where window and exterior door frames were not air tight to the exterior. Our model simulated air infiltration at the frame reflecting the actual thermal performance of the assembly as validated by our field instrumentation findings across several spot checks of data. See Model Validation section below for further explanation of instrumentation method.

Field Inspection. Observations made on-site found construction methods differing from contract documents. The most significant inconsistency was a lack of backer rod platform and backer rod present at window sills inspected. It is possible the backer rod and sealant was intentionally not installed at some locations to increase drainage performance of the aluminum window frames. The result is that outside air is allowed to penetrate the wall assembly further that intended in the design. In other locations as shown in Figure 3, sealant has failed due to a lack of backer and a lack of closure providing enough surface area to successfully install sealant.

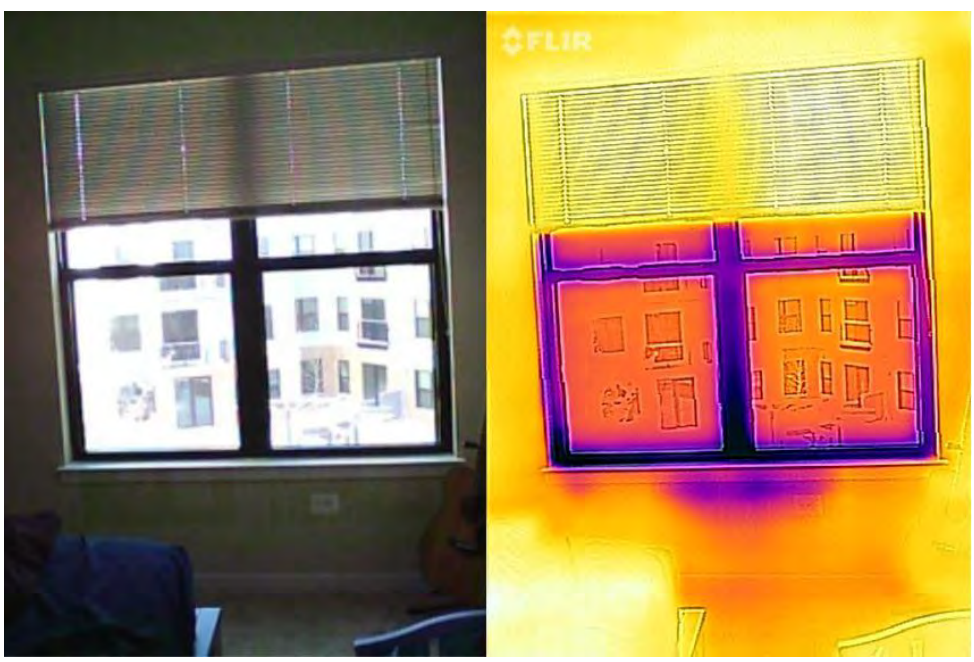

Figure 4: Infrared imaging of typical double window at property shows the coldest temperatures concentrated at the center jamb and below the sill.

During our investigation, we used infrared imaging to understand the location of air infiltration at windows. Figure 5 shows a typical double window at the property with the coldest temperatures concentrating at the intermediate jamb and the central area below the sill. This infrared image further supports the finding that air infiltration at the sill is the main cause of condensation at the windows.

Model Validation. To create a model that simulated assembly performance in-situ we, installed Type K

thermocouples to record the temperature at the window frame, stool, and glass using HOBO data loggers. Additional HOBO data loggers were placed both indoors and outdoors to record temperature and humidity over a 4 day period (March 17th-20th 2015). Data logged March 20th at 9:15am was chosen out of several spot checks for comparative model analysis. Below is the table of temperatures recorded at that time comparing the sensor data to the below modeling results for the "As Designed" model and the revised "Predictive Model" with air infiltration at the sill shown in

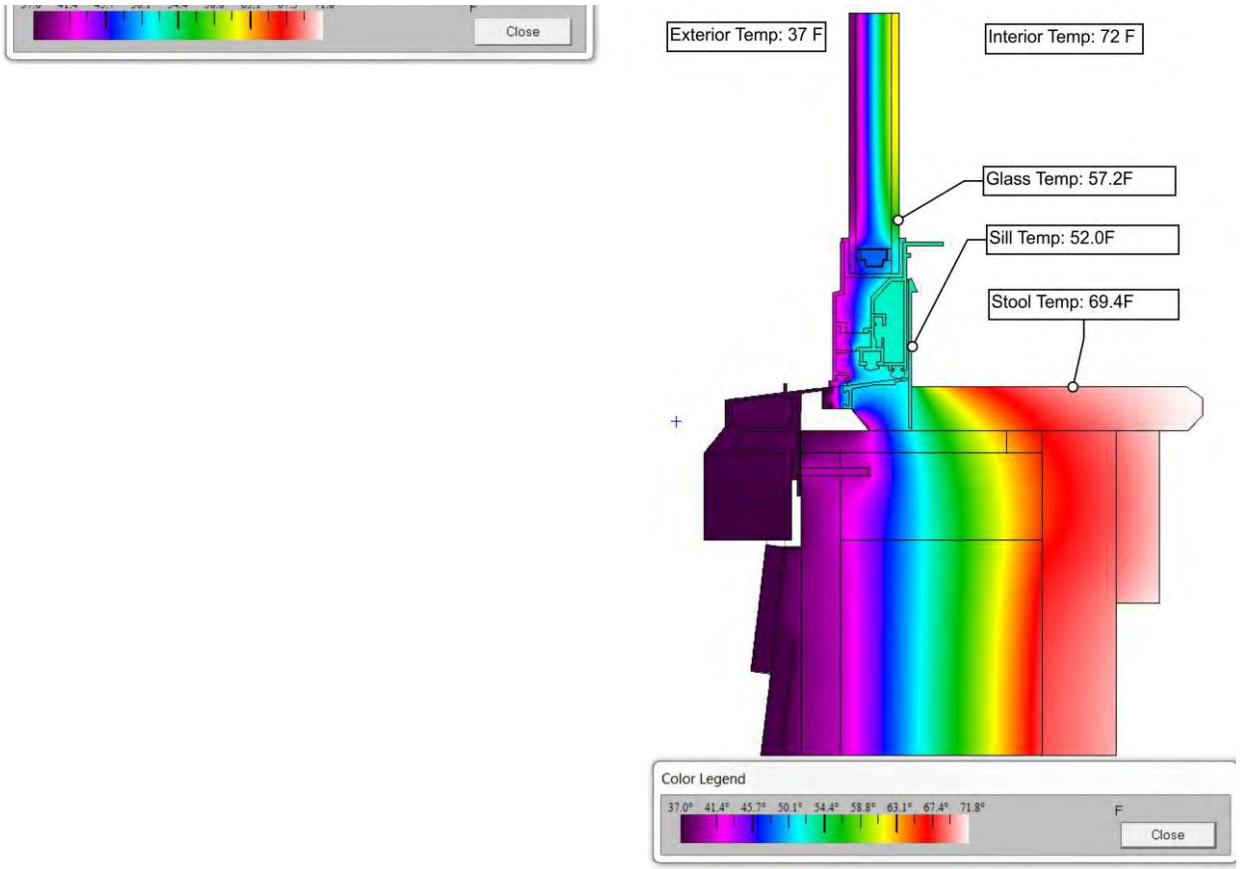

AS DESIGNED **PREDICTIVE MODEL**

Figure 6.

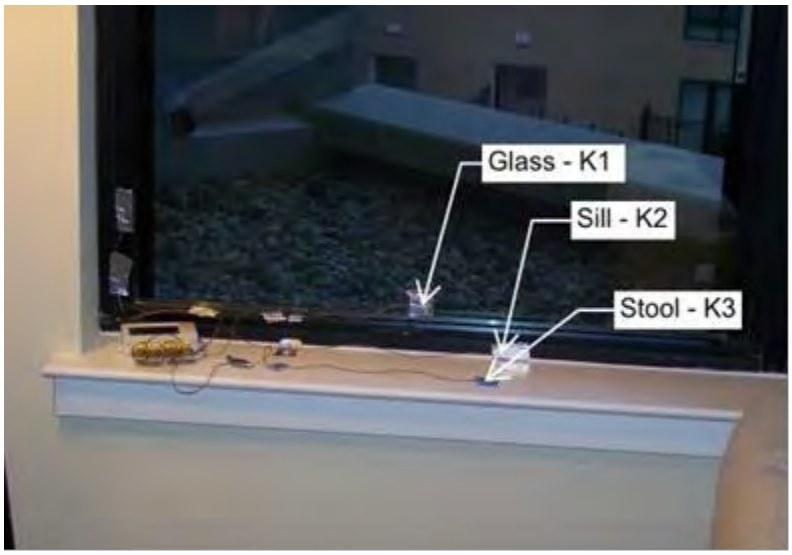

Figure 5: Sensor array installed at window to gather baseline performance data at window sill.

Table 2: Temperature Comparison

Sensor Location	Logger Identifier	Sensor Temp °F/RH	As-Designed Model	Predictive Model
Exterior (outdoor)	EX	36.795°F(2.66°C)/85.49RH	37°F (2.78°C)	37°F (2.78°C)
Interior (indoor)	INT	71.27°F(21.81°C) /28.69RH	72°F (22.22°C)	72°F (22.22°C)
Window Glass	K1	57.15°F (31.97°C)	58.3°F (14.6°C)	57.2°F (14°C)
Window Sill	K2	52.0°F (11.11°C)	53.2°F (11.78°C)	52°F (11.11°C)
Window Stool	K3	65.41°F (18.56°C)	70.1°F (21.16°C)	69.4°F (20.78°C)

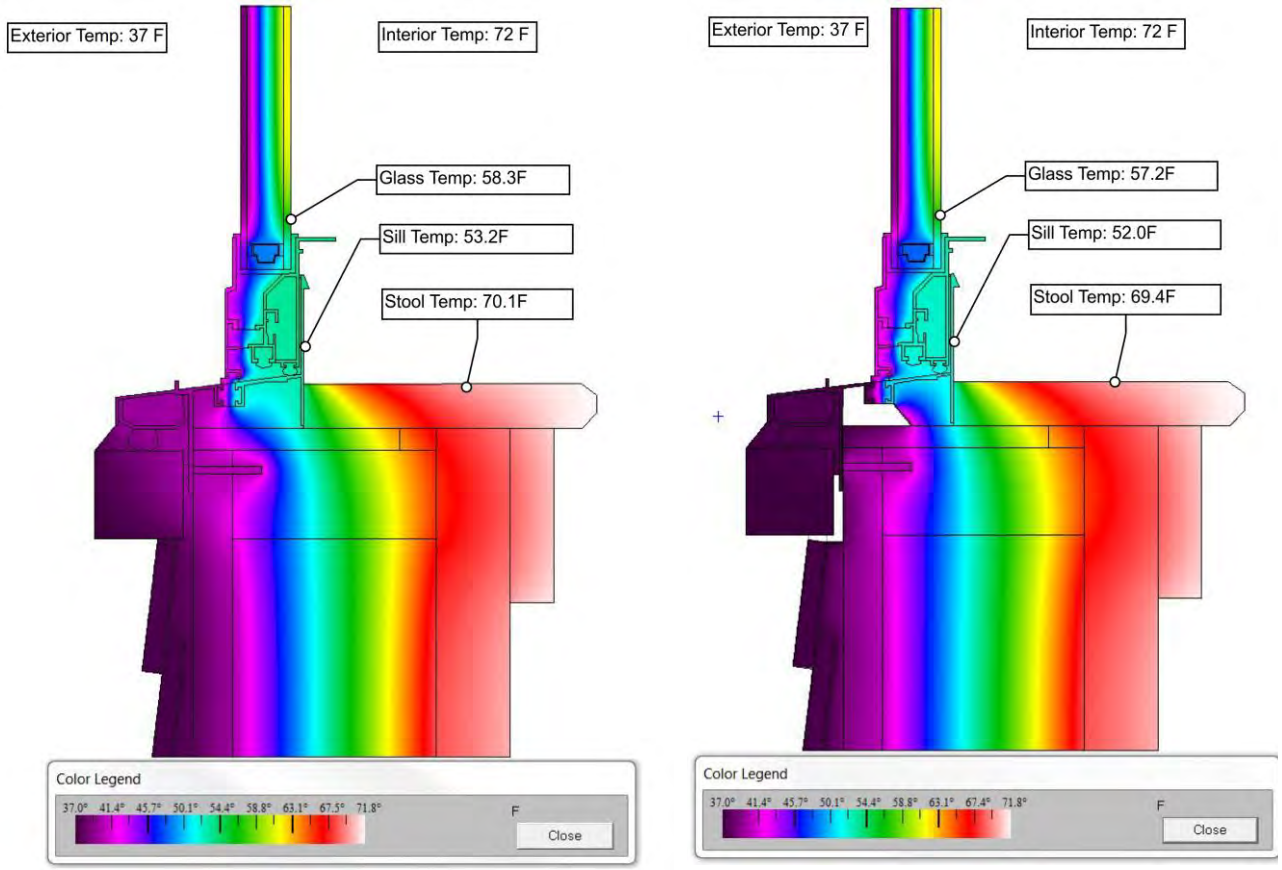

AS DESIGNED **PREDICTIVE MODEL**

Figure 6: THERM comparison of window installation as-designed and predictive model verifying field performance data with outside influence air due to air leakage below frame.

In Figure 7 the left model shows the thermal performance of the assembly "As Designed" referring to the design intent of having no air infiltration into the window frame through the window trim interface condition. The figure to the right shows the data validated THERM model with **partial air infiltration** in the frame matching recorded thermal performance from our on-site data, we refer to this as the predictive model because it is used to predict the actual performance of the window frame. Several stop checks were made using data at various moments in time. With a validated predictive model the next step is to model the proposed solution of installing a passive heat fin at the interior of the still stool.

Proposed Solution

The proposed solution is based on the above findings that the increased risk of condensation on the window frame is caused by; misalignment of the thermal breaks across the wall to window interface, and air leakage from the exterior below the sill. These two conditions cause the window and window sill frame to have condensation during winter months when warm, moisture laden air meets the cold metal sill.

Our proposed solution enhances heat flow to a frame to reduce the risk of condensation. Increasing heat to the window can be accomplished by several strategies; increasing interior temperatures in a space, increasing heated air flow by directing diffusers towards the window, and limiting stagnant air at the window by leaving a gap at the bottom of blinds when lowered (while not violating privacy). Our proposed solution poses that a more effective way to move heat to the frame is using an intentional thermal bridge. A passive heat fin is an

intentional thermal bridge using conductive metal, usually below an insulated stool at the sill to more effectively move heat from elsewhere (like a vertical wall surface near a window) to the window. In this case study, wood sills act as are a good insulator to direct heat toward the window when compared to a metal stool. Although some of this heat is inevitably lost to the exterior through the same thermal inefficiencies of the as-built condition, it results in increased temperature on the frame. To be clear, this means the overall R value of the window is reduced, although, the argument is that the thermal resistance of the unmodified window is under-performing. This proposed solution has the advantage of managing condensation moisture despite the current construction deficiencies and future risks for the owner of not always having perfect timing on sealant maintenance, while accepting heightened relative humidity levels for residential occupants

The proposed solution calls for installing a passive heat fin in a Z shape attached to the window frame, then running under the window stool and turning down behind the window apron at the interior. The heat fin is made of 20 gauge aluminum set into a conductive gel on the horizontal and where it turns onto the window frame to enhance heat flow to the window. This passive heat fin creates an intentional thermal bridge from the interior inboard of the thermal breaks which allows interior heat to reach the window sill and frame resulting in higher temperatures on the metal surface and reduced risk of condensation. When comparing the results of the as-built scenario in the center to the proposed solution on the right, the models demonstrate that an increase of 6.2°F (-14.23°C) at the bottom of the sill occurs with heat moved through the passive heat fin. This is due to heat flux through the fin reducing the wall temperature at the base of fin, and with some losses along the fin, allowing much of that heat to be taken to the window frame in a well-designed heat fin. Some heat is also lost to the outside, but overall vastly warms the sill.

The figures below compare the thermal performance of the as-designed window assembly, the as-built window assembly and the proposed solution to substantially reduce the likelihood of condensation on the sill at the analyzed temperatures. Some risk of incidental condensation on the coldest days of the year can occur and if blinds are closed isolating the windows from the heat in the room, or if a unit is kept too cold will occur, but for substantially less time.

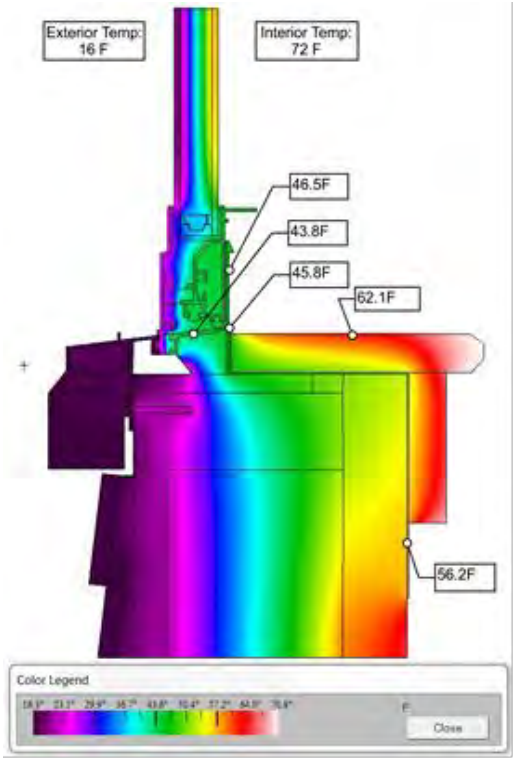

Figure 7: Thermal modeling results of proposed heat fin in 20 gauge aluminum showing increased temperature at the interior sill frame when compared to Figure 3.

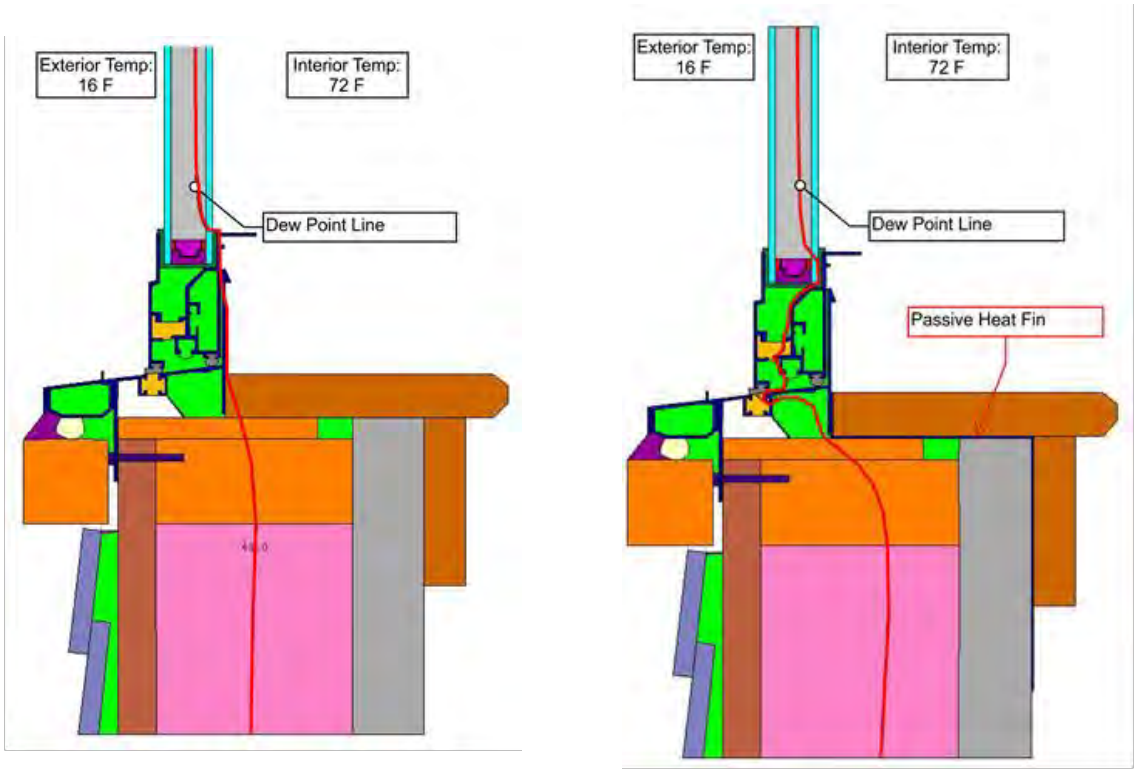

REDICTIVE MODEL WITHOUT HEAT FIN PREDICTIVE MODEL WITH HEAT FIN

Figure 8: Side by side comparison of the base case model without a heat fin on the left and the proposed passive heat fin on the right showing an increase temperature at the interior sill frame.

In the THERM model, the dew point is located roughly in the middle of the insulated wall cavity and the

IGU, in Figure 9 the dew point line at the interior window frame, where the risk of condensation is the greatest, moves into the window frame indicating the risk for condensation is reduced due to the frame being warmer.

Mock-up and Validation

Before installing this solution across all windows experiencing the condensation issue we sought to validate the proposed solution by installing a full-scale mock up at the property on a window that consistently experiences condensation.

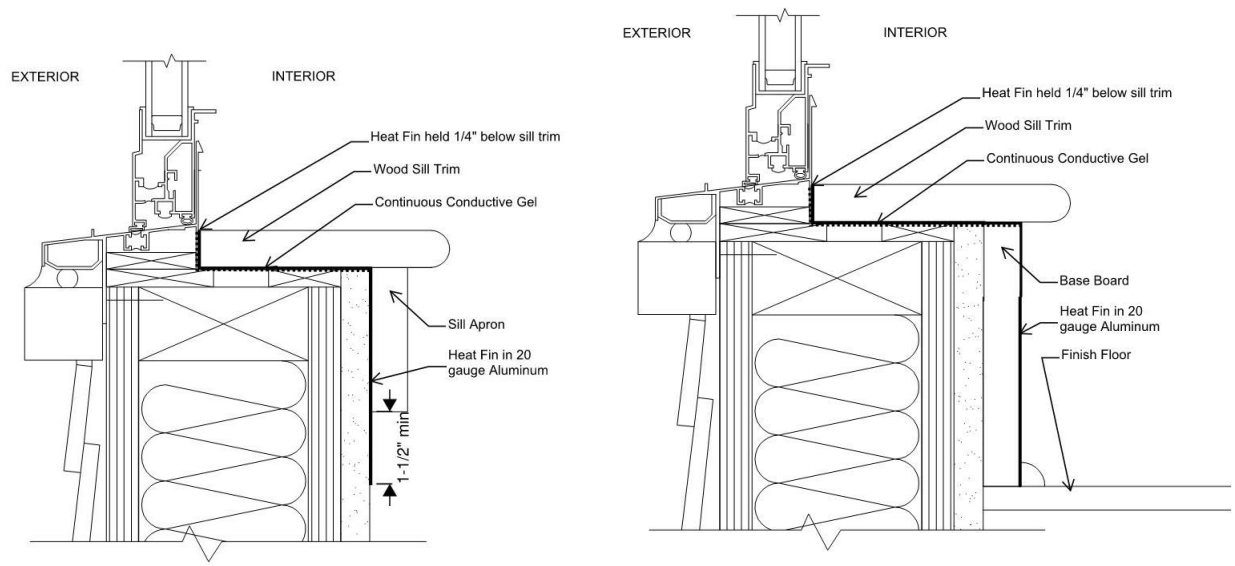

TYPICAL SILL LOW SILL

Figure 9: Designs for the proposed passive heat fin solution at two window configurations found at the case study property.

The window chosen for the installation was slightly different than previously modeled conditions in that the sill was at floor level as opposed to waist level. As such, there was no sill stool to install the fin under so the fin was installed on top of the base board. After installation an array of Type K thermocouple sensors were set up to monitor temperatures at the glass, sill and fin.

At the coldest period during the monitor period the window sill reached a low temperature of 33.49°F (0.82°C). At that same moment, the interior temperature near the window was 52.4°F (11.33°C) at 51.8% RH, this means that the dew point of 35.2°F (1.78°C) was reached and there is risk of condensation at the sill. Unfortunately there is no way to verify visually if there was condensation at this moment because no one was there to make visual observation. However, we do know that convection at the sill may have been moving air across the sill at a high enough rate to prevent condensation from forming, see more in the discussion below. We also know that the period there was a condensation risk was relatively short and drying could have occurred.

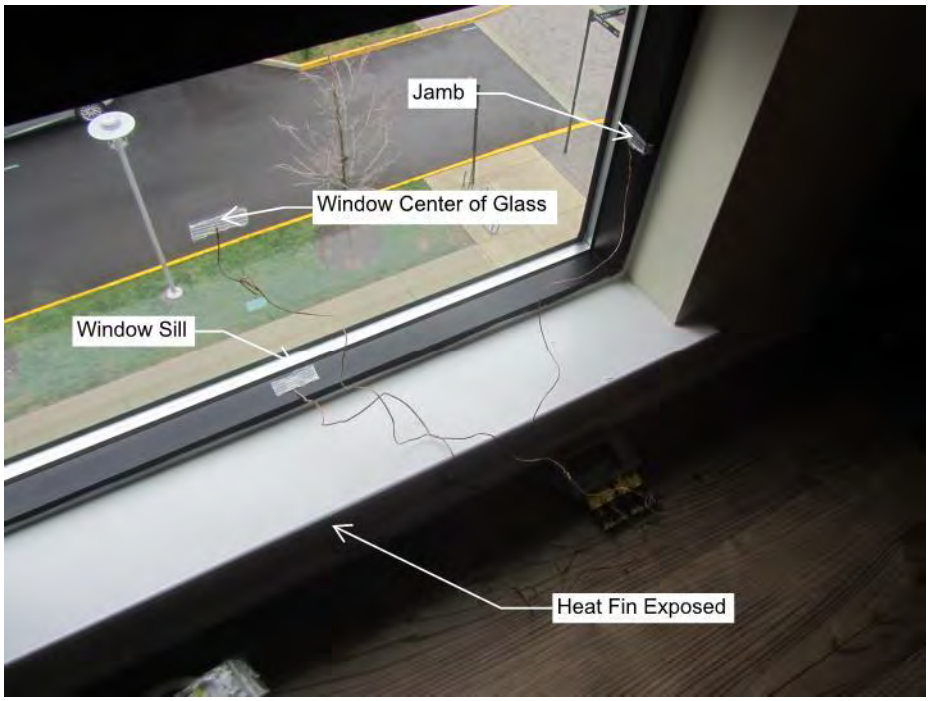

Figure 10: Sensor array set-up for in-field mockup of heat fin.

DISCUSSION

Condensation occurs when a surface is below the dew point temperature of the air near the component has a sufficient moisture content to form droplets. Condensation can appear as moisture droplets, a small pool of water, or frost and ice if temperatures of the frame are below the frost point. Enhancing heat flow to a surface will help reduce the risk of condensation. In this case study the surface experiencing condensation was a metal framed window. Reducing the risk of condensation can be accomplished by:

1) Increasing interior temperatures in a space to direct more heat to the window frame

2) Increasing heated air flow by directing diffusers towards the window

3) Limiting stagnant air at the window by leaving a gap at the bottom of blinds when lowered (while not violating privacy). A gap at the top of the window blind would be ideal to act like a return vent to reduce the risk of air stagnation which will increase moisture held near the window or door.

4) Install intentional thermal bridging which has the additional advantage of managing moisture by reversing current deficiencies on the frame design.

The proposed solution of a passive heat fin acts as an intentional thermal bridge that uses conduction to more effectively move heat. The sill stool acts as an insulator that allows the metal fin below to move heat from the area of higher heat at vertical wall surface near a window to the area of lower temperatures at the window frame. Although some of this heat is lost to the exterior through the same thermal inefficiencies of the as-built condition of the window frame, it results in increased temperature on the frame. The passive fin can be thought of as additive to the frame, the frame is still seeing heat from the air along its surface; but the fin is taking heat that is transferred from the air in a space in another component (the wall) and adding it to the

frame through conductivity. This results in the increase in temperature on the frame that varies with interior and exterior conditions. In our validation model, we examined the flux vector path and magnitude of the materials in the assembly to determine the precise amount of heat moving through the heat fin.

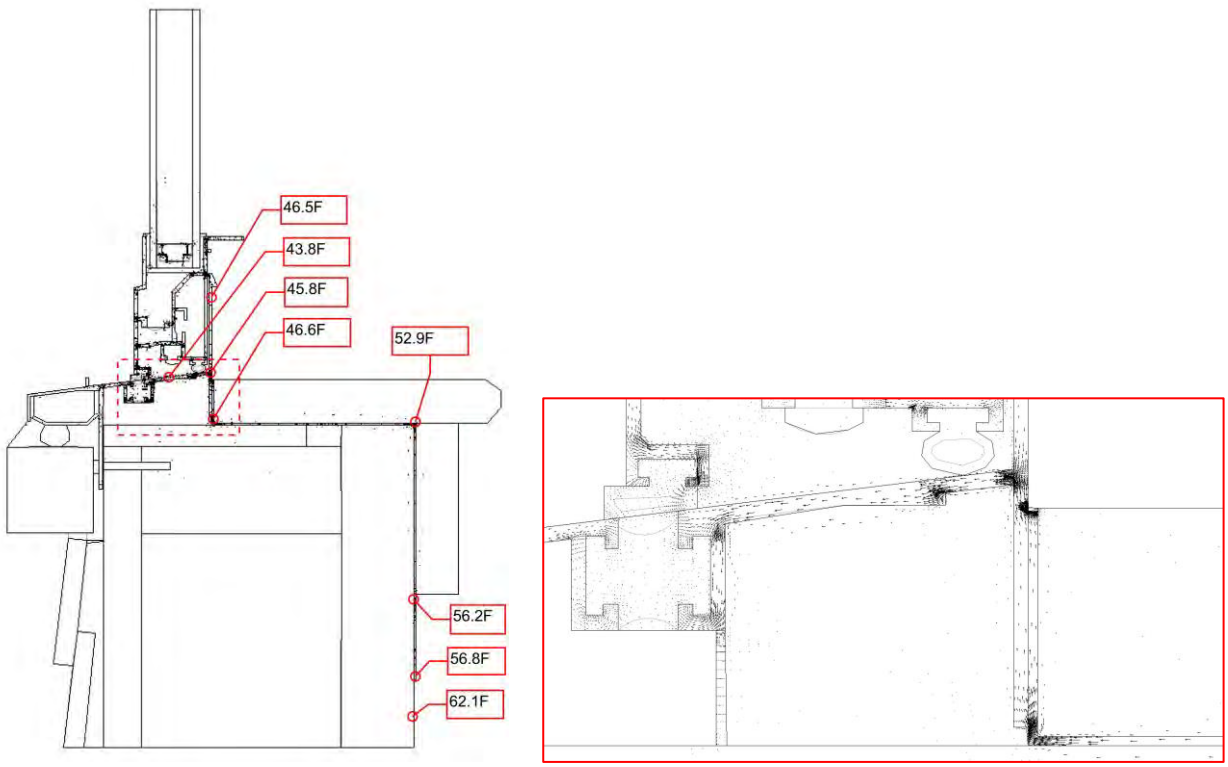

Figure 11: Flux vector diagram of heat fin showing concentration of heat transfer.

In Figure 20 the flux vector diagram shows that this passive heat fin performs due to the highly conductive nature of aluminum which effectively moves heat from the interior air temperature and wall surface temperature to the window frame resulting in the frame warming of 6°F (-14.44°C). The heat is then dispersed into the frame via the thermal bridge that was formerly the weak point in the frame exposed to outside air to the point of the thermal break and dissipates to warm the frame above as well at the operable unit. This substantially reduces the amount of time the window will experience condensation but also increase heat loss through the window.

The fin uses conduction predominantly to move heat from the exposed interior metal surface below the sill to the window and uses the wood sill as a top side insulator to reduce heat loss to the air along the fin and a conductive gel below over wood blocking at the sill to optimize the heat transferred. The THERM tool models this conductive flow. However, other building physics are at play at the fin. In addition to direct conduction, where the fin is warmer than the frame and glass, it conducts heat but also will radiate some of that heat as well. This radiating heat sets up an enhanced flow path for surface vapor diffusion for any moisture that may collect on the fin.

In addition, a concept that is not easily demonstrated is that air flow to the fin and window will experience convection because of the delta in temperatures. When the air near the fin gets cooler between mechanical cycles, the heat from the fin radiates into the space and creates a small convective loop at the sill. This

convection loop increases the diffusion of moisture from the elevated surface condition that is at saturation (some condensation) allowing this moisture to leave the window surface faster.

These localized diffusion, radiation and convection phenomena are not picked up in the model, but are sometimes picked up by a well thought through sensor array that also uses a thermocouple to pick up the air temperature just off the frame and visual observations at exterior temperatures below the heat fin effective design temperature at a set interior temperature.

Heat fins have to be engineered to be optimized, as we have done through our analysis, to determine the thickness that should be utilized within reasonable limitations of the space. Although they will not fully eliminate condensation on the coldest days of the year in their passive nature, increasing heat within a unit on colder days can greatly help.

Follow-Up

In the year following installation of the mock-up heat fin, the owners and operators installed the proposed solution in several units across the property. After a cold but relatively mild winter from 2016/2017 it was found that noticeable condensation continued to occur if one of more of the following conditions were met:

- the building elevation experienced increased wind washing in cold months;
- window surrounds were not re-sealed at the exterior side perimeter;
- the interior of the unit was held at 68° (20°C) or lower;
- humidity levels were increased in the unit above normal levels.

The propensity of condensation in these conditions is consistent with the design intent of the passive heat fin. It illustrates the need for a holistic approach to condensation management is situations of increased risk through occupant education and automatic environmental controls. In order to make the system more robust a solution such as heat trace would likely need to be implemented, a solution that can by cost prohibitive for many owners.

CONCLUSION

As the climate continues to change, it is conceivable that many buildings will experience performance degradation issues similar to the condensation phenomenon explored in this analysis. Performance issue will continue to be persistent as long as construction methods and product testing standards do not keep pace with changes in weather patterns locally and globally. The new extremes that are becoming increasingly normal make a significant impact in how the building enclosure design will respond to the new climate norm. Coupled with the climate, the vast array of building enclosure systems and materials we can build with and the cost to construct new construction economically create conditions where buildings are experiencing increased risk for moisture and heat transfer issues. For building owners simple solutions that can be deployed on large scales are more economical than tearing down and rebuilding. Retrofitted solutions that increase the resiliency of buildings will be a key component to keeping existing building stock functional.

In this case study a newly constructed multi-family property was experiencing condensation issues at windows sills throughout the building. After investigation via visual observation, infrared thermography, and thermal modeling is was determined that a combination of insufficient design, poor installation detailing, and average grade products caused the systemic condensation issue. The resulting assembly had a heightened risk of condensation due to thermal bridging that was further exacerbated by exterior air infiltration at the window frame. Uncontrolled air flow, especially during heightened wind, can undermine thermal performance of fenestration products. This in and of itself can undermine fenestration performance by allowing air to traverse across locations of thermal breaks in the fenestration and thus undermine the systems thermal performance. The wind washing effect can also allow frosting that occurs on the inside to have unusual patters sometimes in how ice buildup is occurring. This can help those trying to understand the reasons for condensation on the window product to see if another influencing force besides interior to exterior heat flow may be at play.

The solution proposed, installed, and validated used a passive heat fin to move heat from interior surfaces to the window frame. This solution effectively raised the temperature of the window frame enough to reduce the risk of condensation, but not eliminate it, as the validation data shows. Unlike an active system such as heat tracing which converts electrical power to heat, the passive fin incurs no additional energy burden. As part of the fin is insulated below the stool on this property, it also allows the fin to retain heat for a period of time when a room is not calling for heat through the HVAC system. In visual observations on numerous fins we have designed, we find that many times below the temperature at which the fin is thought to be effective, it is still functioning and visible condensation does not occur. It is the combination of other phenomena at play in surface diffusion, localized convection and some propensity for radiation that explains these conditions where a heat fin is more effective. These are not easily modeled in the current software tools and more study in the field is needed to discern the level of impact each individual building physics phenomena impacts the fin performance.

To avoid these types of performance issues in future projects tools such as constructability reviews, analysis of window placement, mock-ups with instrumentation, training of the trades and better project oversight can help reduce the risk of outliers and offer better means to solve issues before they happen, but are not currently in widespread use in the United States.

REFERENCES

AAMA 1503.1-98. AAMA Voluntary Test Method for Thermal Transmittance and Condensation Resistance of Windows, Doors and Glazed Wall Sections

ASHRAE. 2017. ASHRAE Handbook—Fundamentals. Atlanta: ASHRAE.

ASTM. 2012 G173-03, Standard Tables for References Solar Spectral Irradiance: Direct Normal and Hemispherical on 37° Tilted Surface

ASTM. 2012. ASTM E903, Standard Test Method for Solar Absorptance, Reflectance, and Transmittance of Materials Using Integrating Spheres. Philadelphia: American Society for Testing and Materials.

Edwards, D.K, Gier, J.T., Nelson, K.E. and R.D. Roddick. 1961. Integrating sphere for imperfectly diffuse samples. Applied Optics 51:1–12.

Farber, E.A., Smith, W.A., Pennington, C.W., and J.C. Reed. 1963. Theoretical analysis of solar heat gain through insulating glass with inside shading. ASHRAE Journal 50(3):69, 73.

Totten, P.E., "Retrofitting And Modernization Of Existing Buildings," The 13th Canadian Conference on Building Science & Technology, Winnipeg, Manitoba, Atlanta, GA, May 2011.

Nelson, P.E., and P. Totten, "Improving the Condensation Resistance of Fenestration by Considering Total Building Enclosure and Mechanical System Interaction," ASTM E06 Symposium on Condensation in Exterior Building Wall Systems, San Antonio, TX, October 2010.

Totten, P.E., and M. Pazera, "Thermal Inefficiencies in Building Enclosures – Causes of Moisture Related Performance Problems," BEST 2 Conference, Portland, OR, April 2010.

Totten, P.E., and M. Pazera, "Improving Building Enclosures Thermal Performance as a Goal of Energy Efficiency," ASCE Fifth Forensics Congress, November 2009.

Heule, M.J., S. McGuire, P.E, Totten and L. Harriman, "Richard Bolling Federal Building: Modernization and Energy Efficiency Upgrades," Journal of Building Enclosure Design, winter 2009.

Totten, P.E., S.M. O'Brien, and M. Pazera, "The Effects of Thermal Bridging at Interface Conditions," Building Enclosure Science and Technology 1, Minneapolis, MN, June 2008.

Totten, P.E., "Building Envelope Retrofits in the Mid-Atlantic Region of the United States: A Case Study," The Tenth Canadian Conference on Building Science and Technology, Ottawa, Ontario, May, 2005.

---

[i] Riebeek, Holli. NASA Earth Observatory "Global Warming" June 3, 2010
https://earthobservatory.nasa.gov/Features/GlobalWarming/printall.php