Retrofitting Resilience into Building in a Mixed Humid Climate

Sarah Buffaloe, Project Manager, Building Enclosures
Paul Totten, Vice President, Building Enclosures

15th Canadian Conference on Building Science and Technology Vancouver, Canada

Opportunity Statement

Passive heat transfer systems such as heat fin can be retro-fitted into underperforming assemblies to solve condensation issues.

They can also be used to demonstrate the potential of innovative applications to provide efficient and comfortable buildings.

Context

For this climate zone the ASHRAE Design temperature is -10°C (14°F)
(Mid-Atlantic Region of US)

Year	Mean Max	Mean Min	Min
2016	32°C (90°F)	-10°C (14°F)	-10.5°C (13°F)
2015	31.1°C (88)	-10°C (14°F)	-15°C (5°F)
2014	31.1°C (88°F)	-10°C (14°F)	-14.4°C (6°F)
2013	33.6°C (89°F)	-5.5°C (22°F)	-9.4°C (15°F)
2012	34.4°C (94°F)	-3.3°C (26°F)	-8.3°C (17°F)
2011	33.8°C (93°F)	-3.3°C (26°F)	-8.3°C (17°F)
2010	32.7°C (91°F)	-6.1°C (21°F)	-8.8°C (16°F)
2009	30.5°C (87°F)	-9.4°C (15°F)	-13.3°C (8°F)

Analysis timeframe

Date of building Completion

Wind Flow and Site Layout

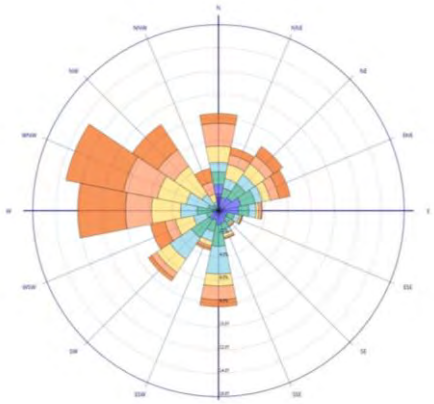

Winter

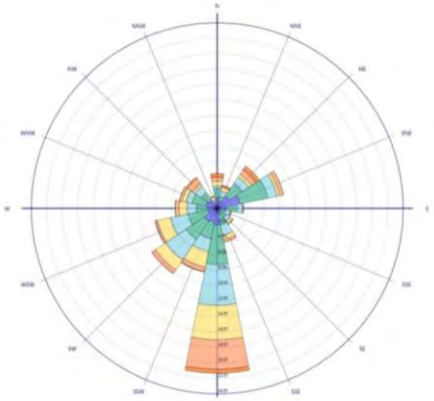

Summer

Thermography in Early Winter

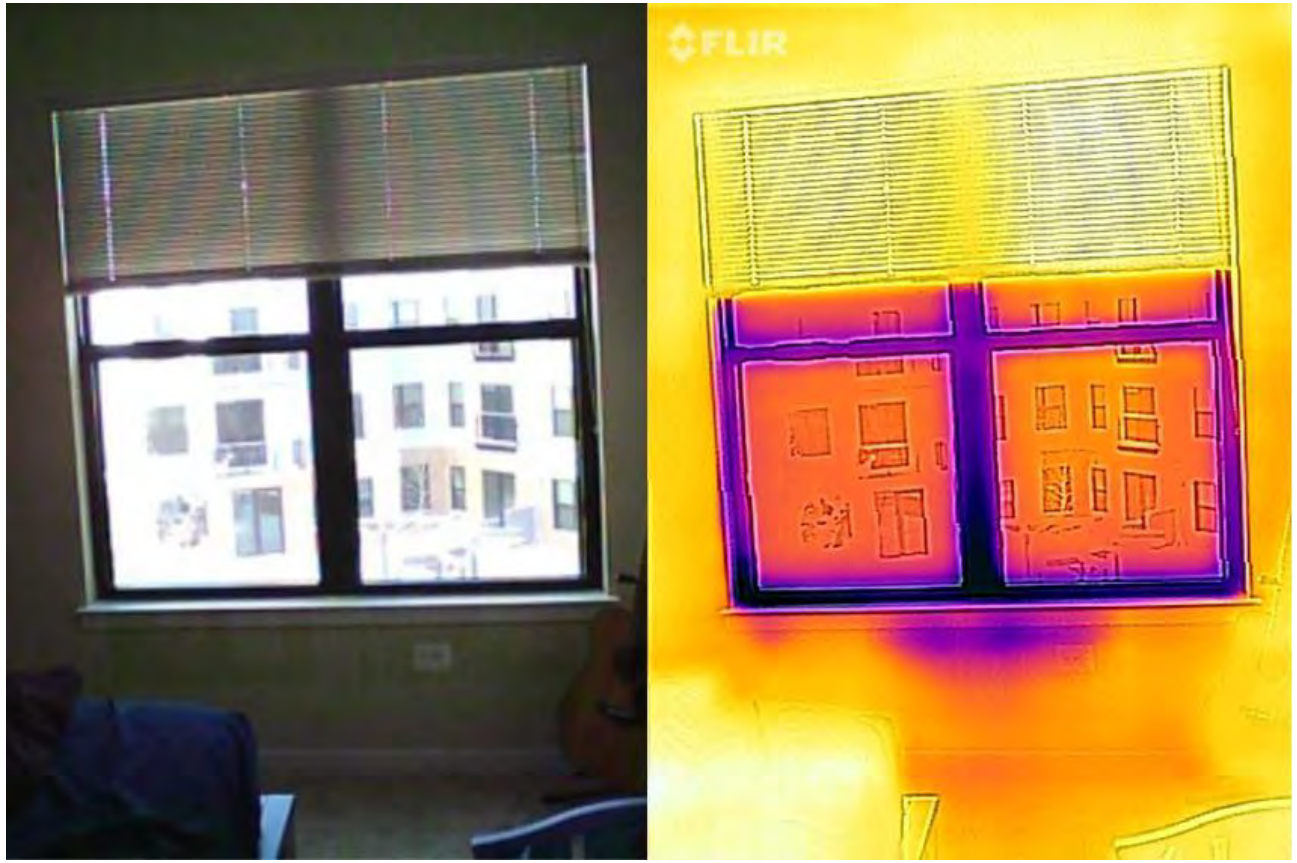

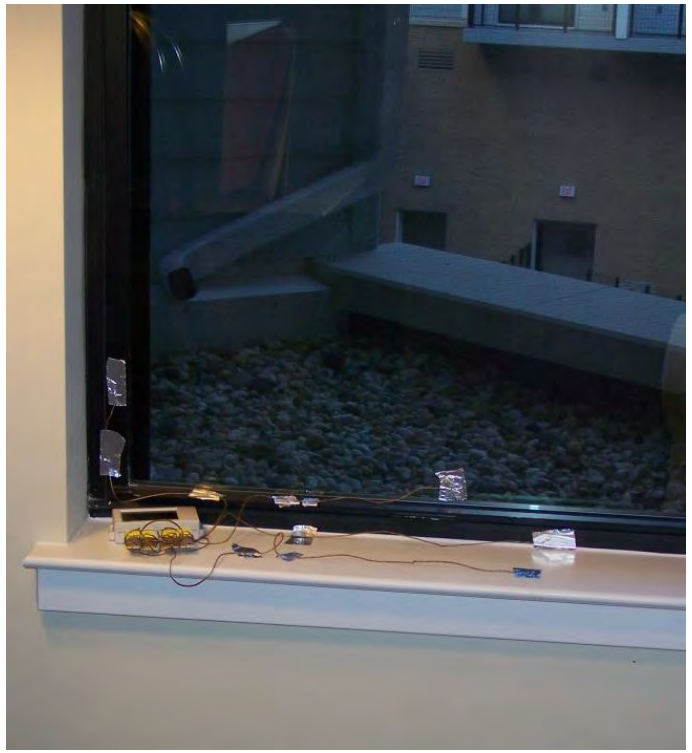

Interior and Exterior Temperature Data

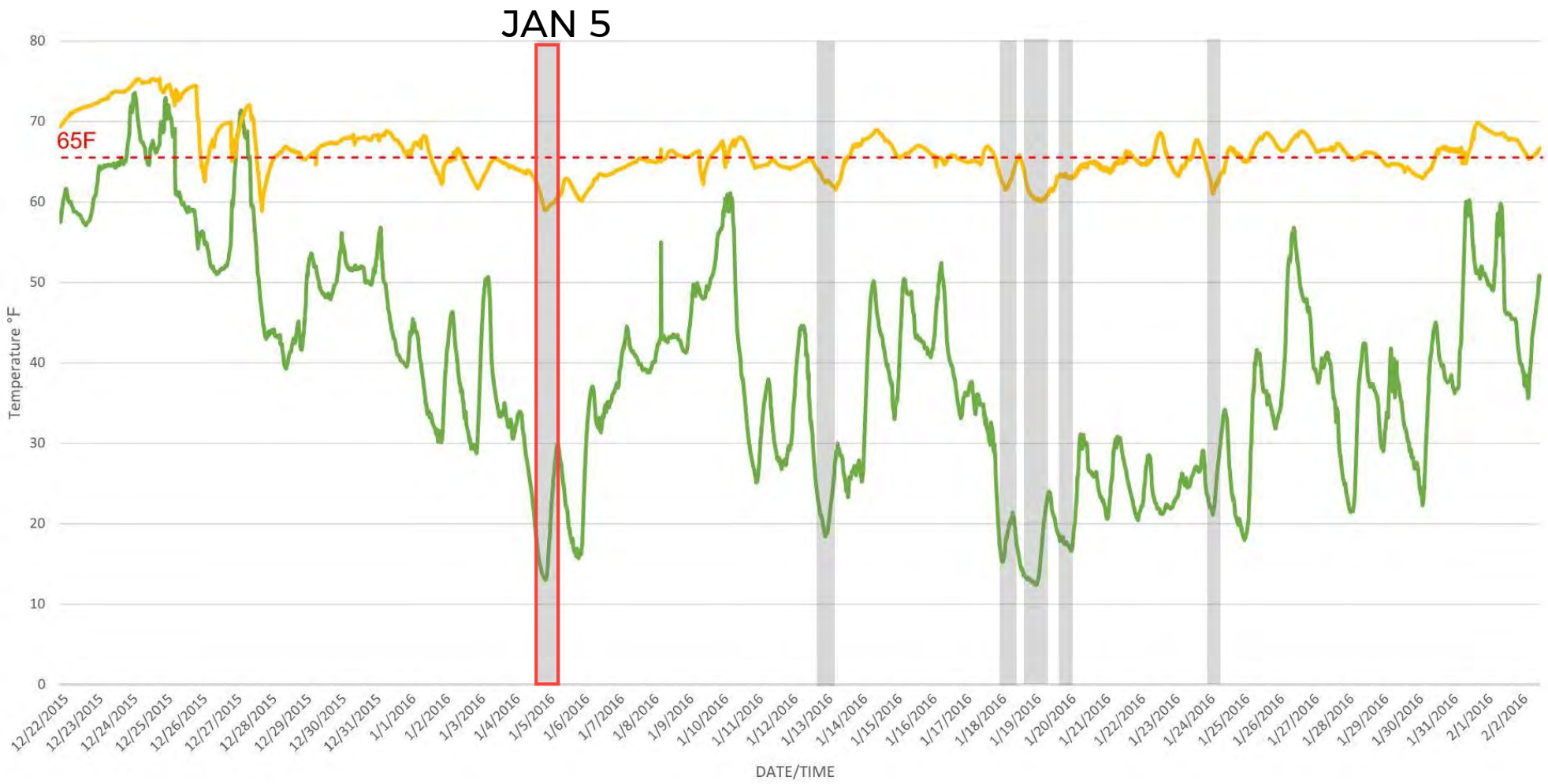

EXTERIOR Temperature

INTERIOR Temperature

Condensation Risk Data

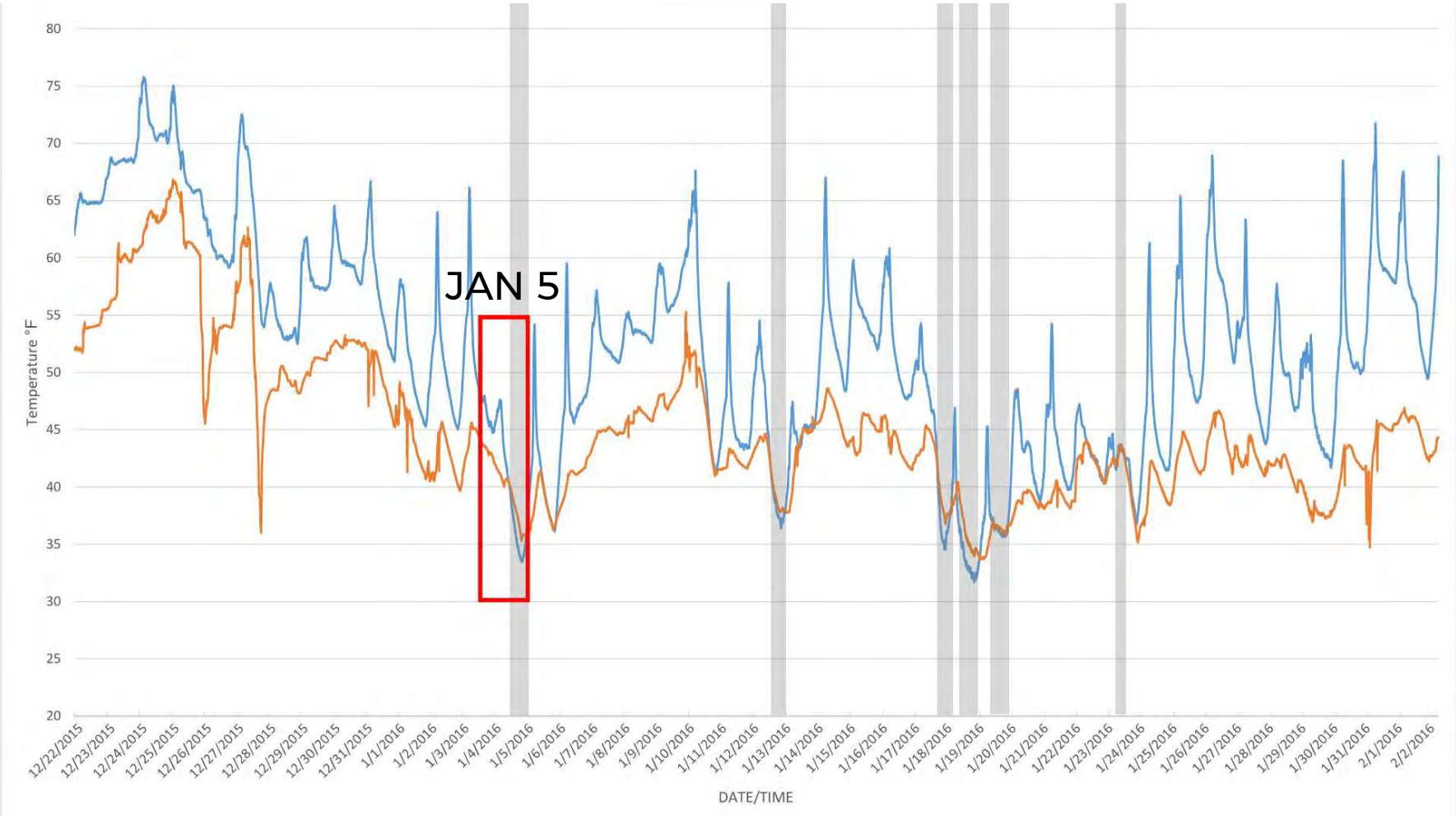

DEW POINT Temperature

WINDOW SILL Temperature

Temperature Differential

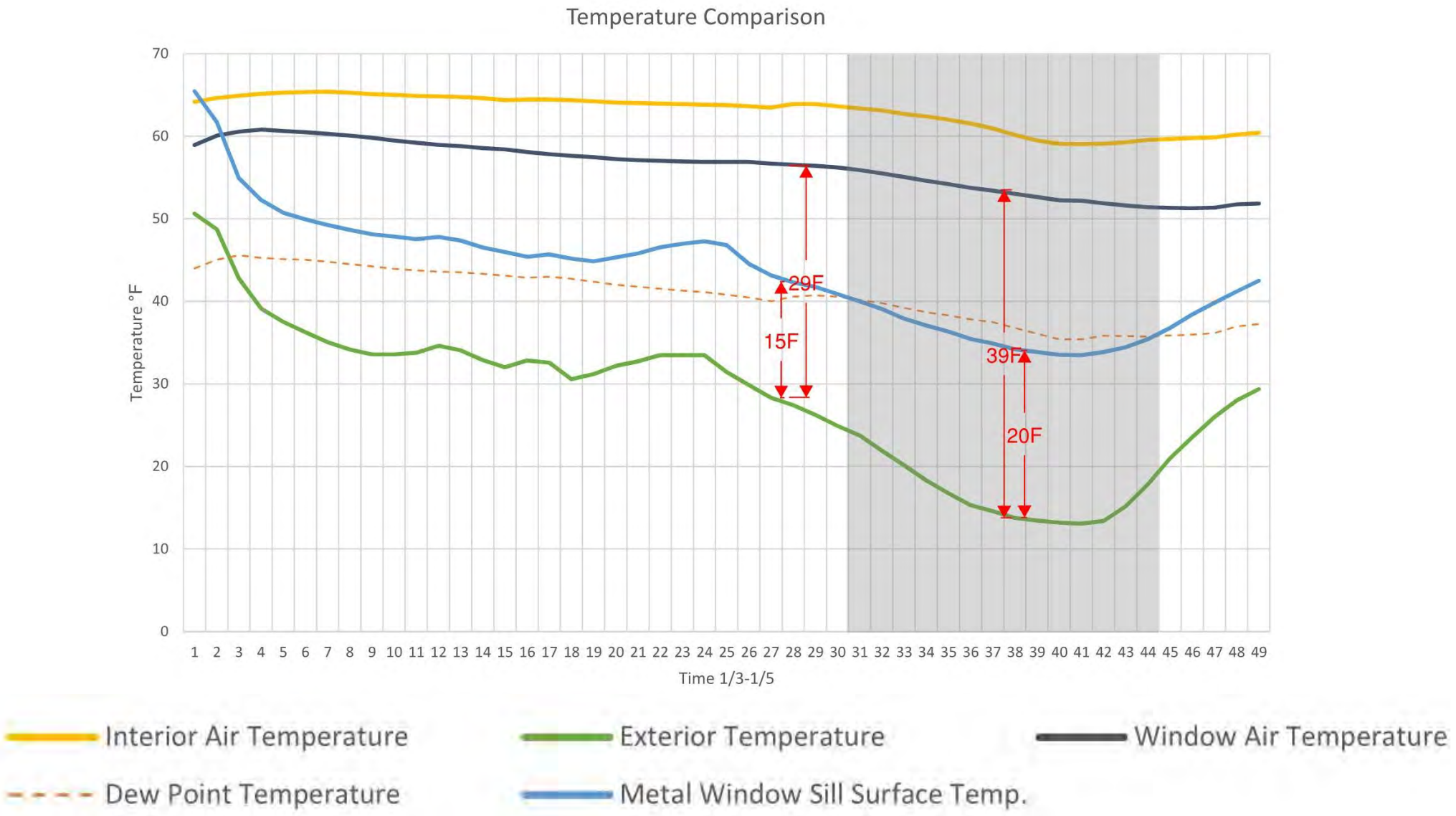

Design

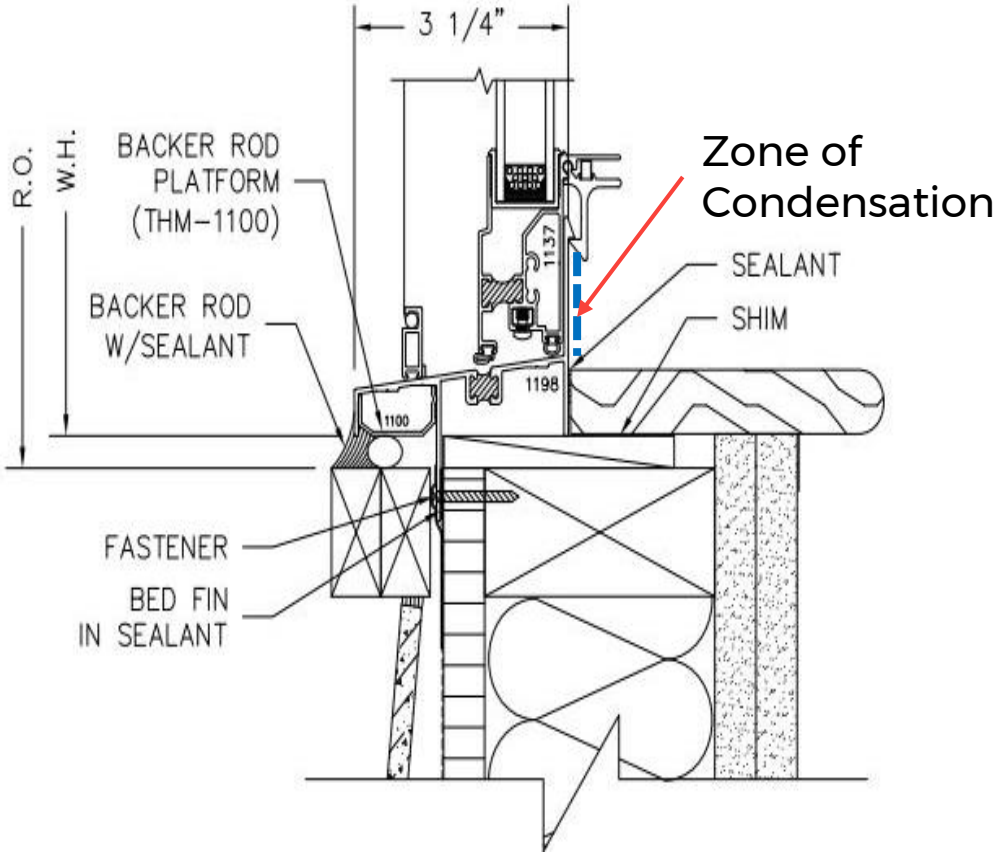
3 1/4"
R.O.
W.H.
BACKER ROD
PLATFORM
(THM-1100)
BACKER ROD
W/SEALANT
FASTENER
BED FIN
IN SEALANT
1100
1137
1198
Zone of
Condensation
SEALANT
SHIM

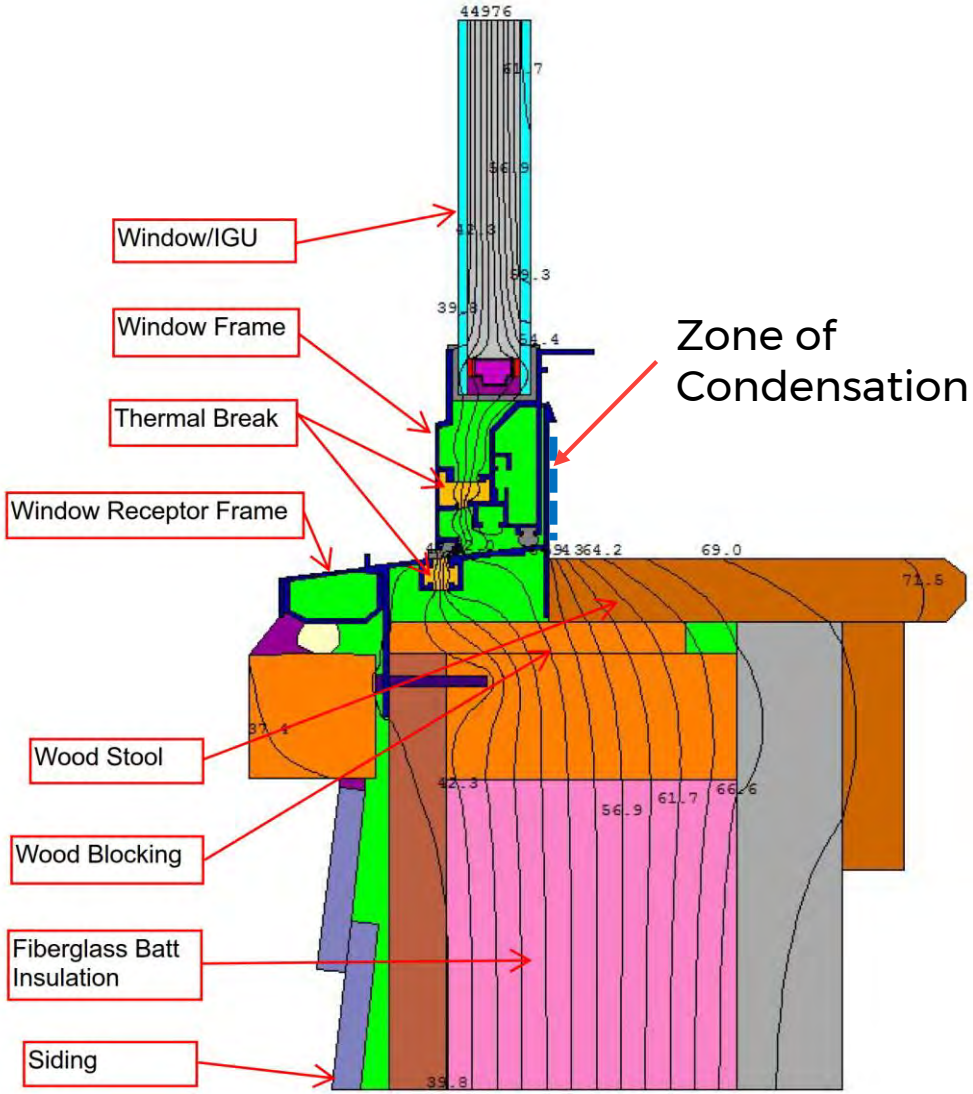
Window/IGU
Window Frame
Thermal Break
Window Receptor Frame
Wood Stool
Wood Blocking
Fiberglass Batt
Insulation
Siding
Zone of
Condensation
44976
69.0
71.5
56.9
61.7
66.6
39.8

Proposed Solution

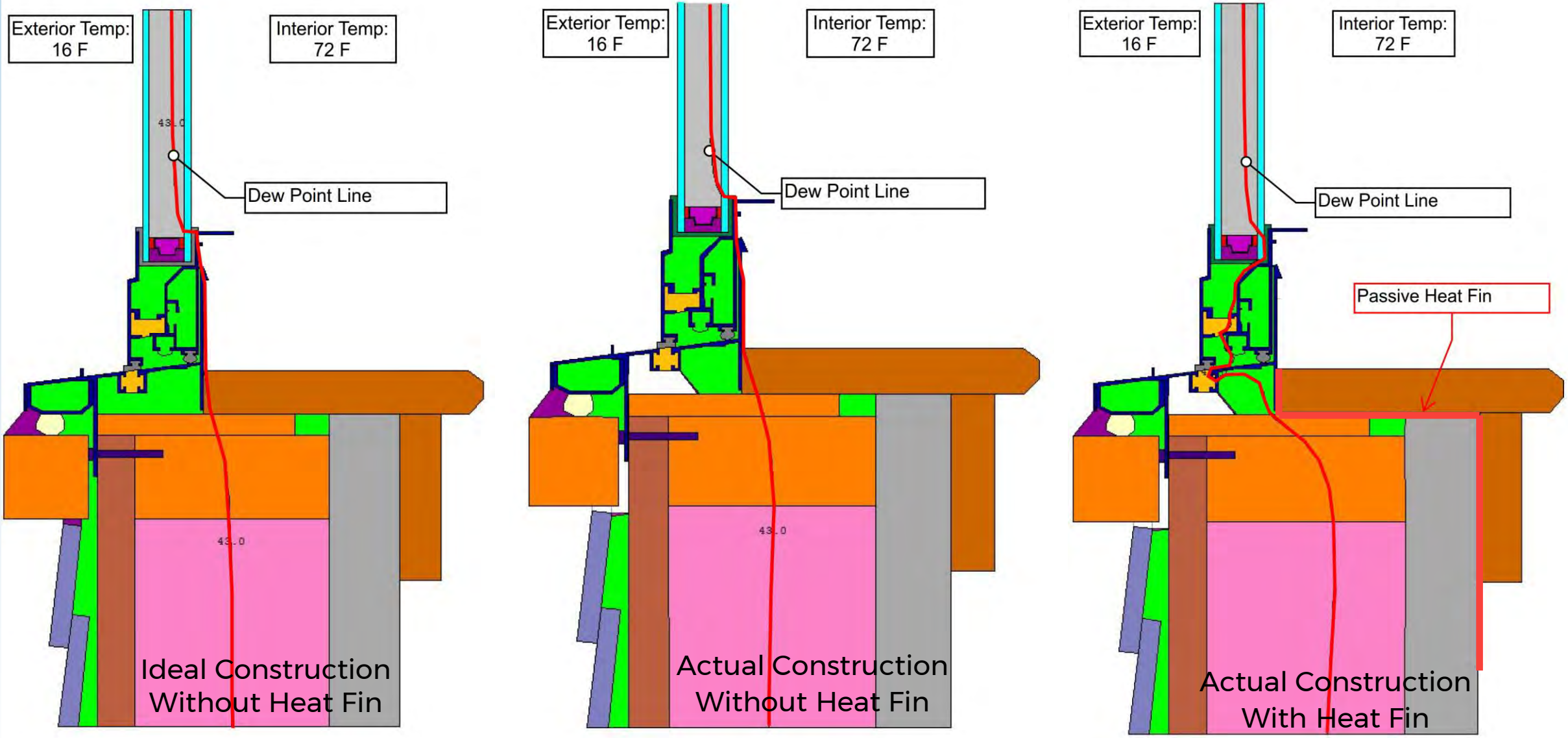

Infrared Results

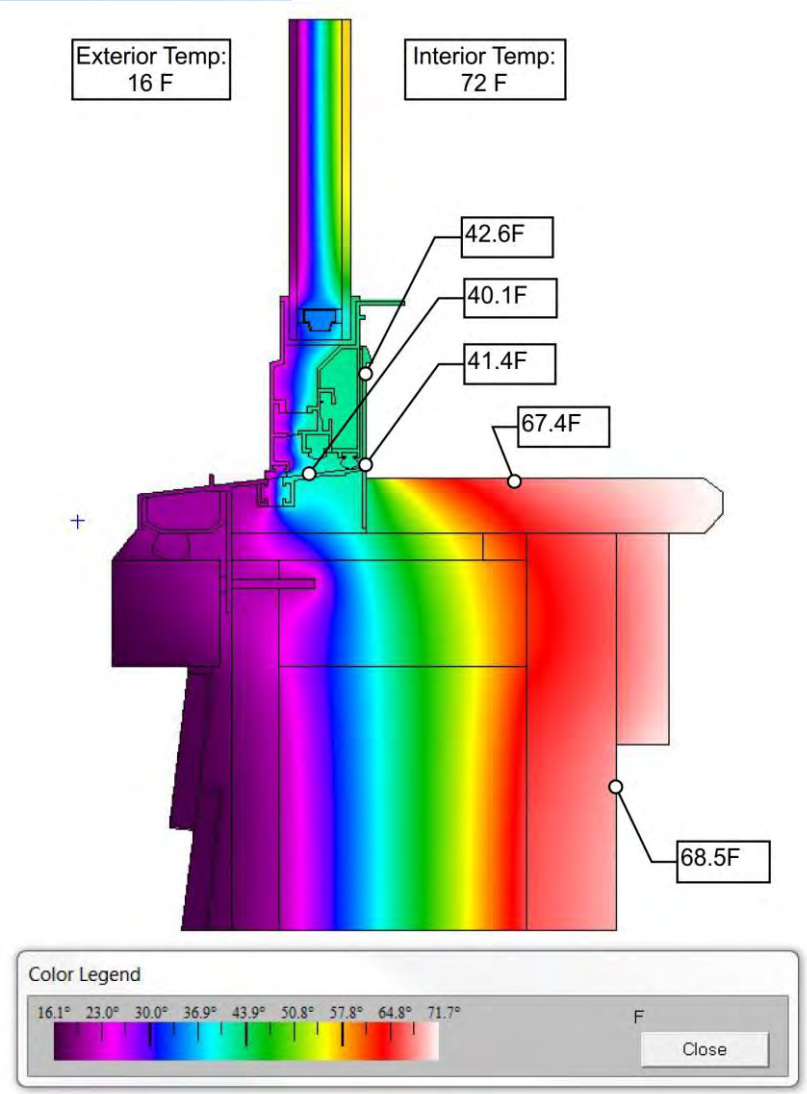

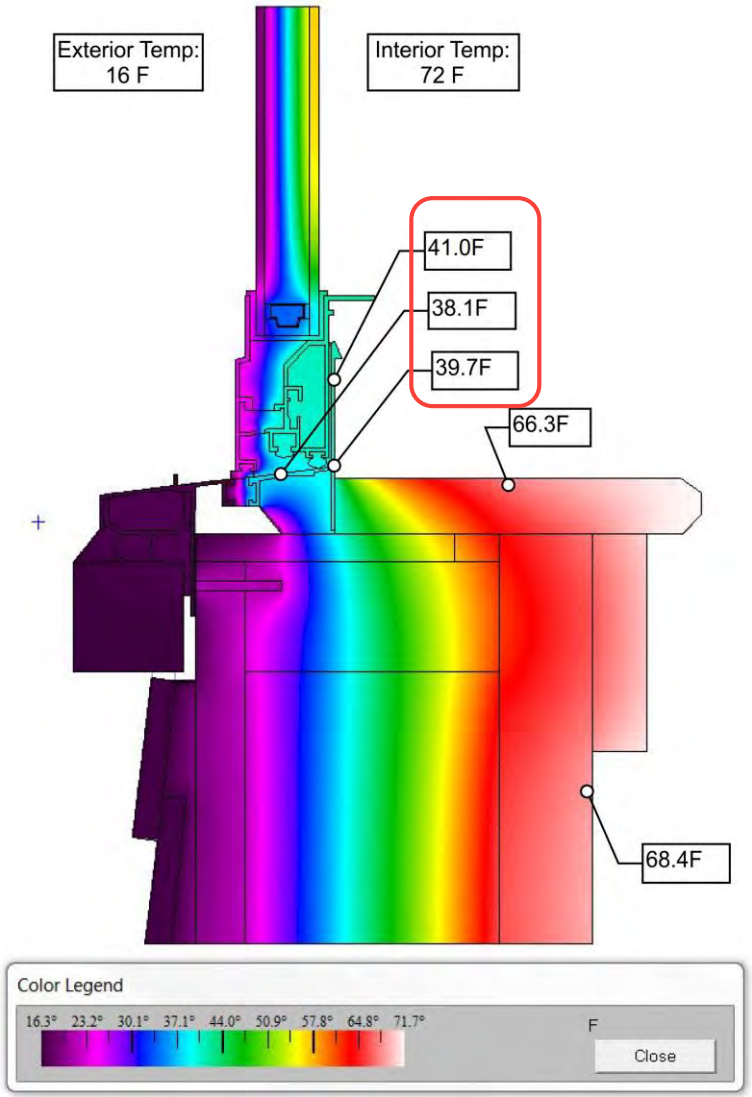

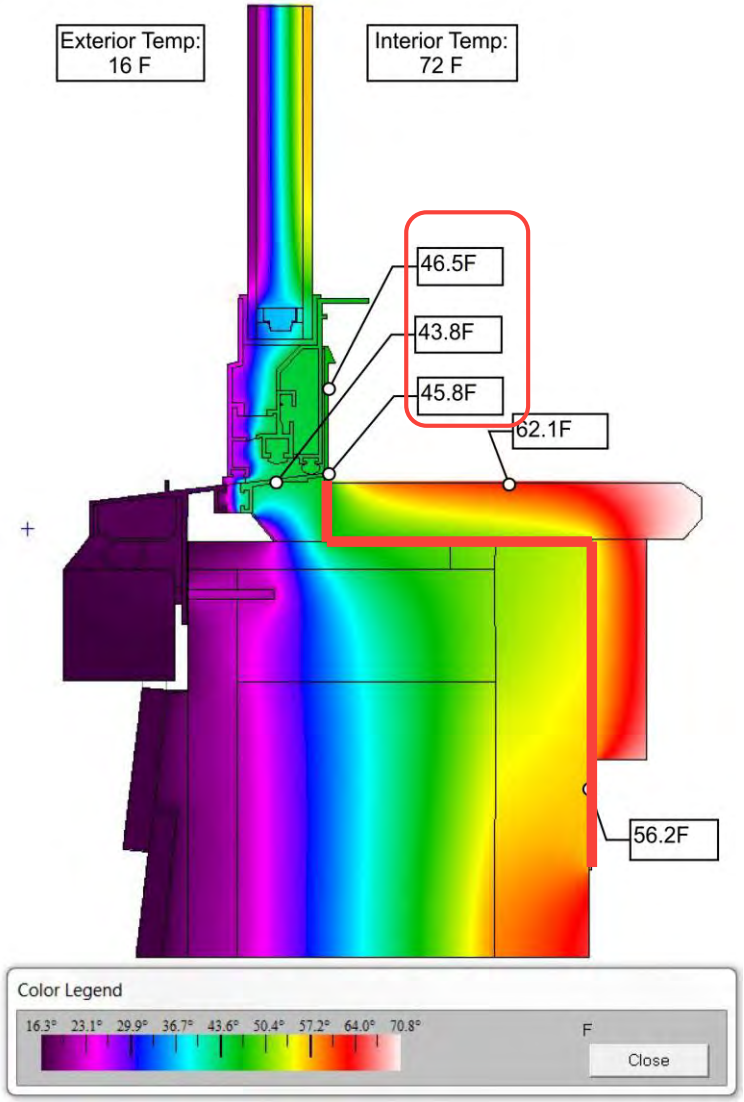

Heat Fin Flux Vector Results

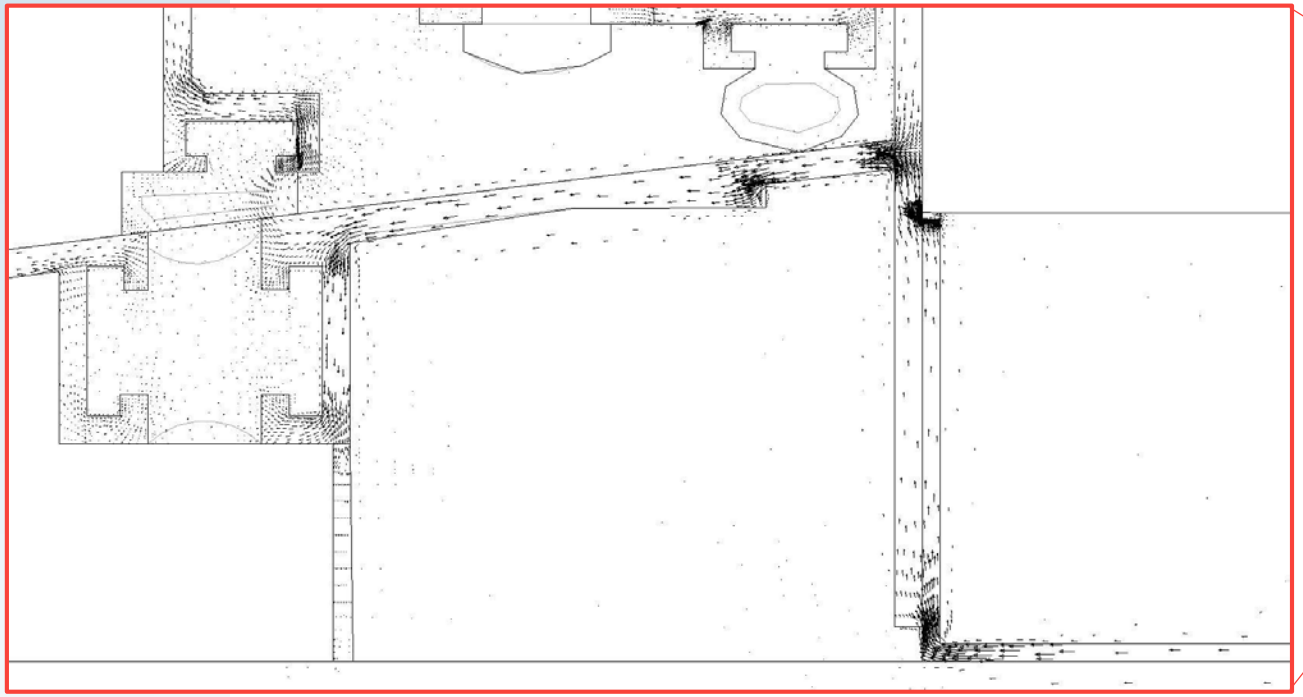

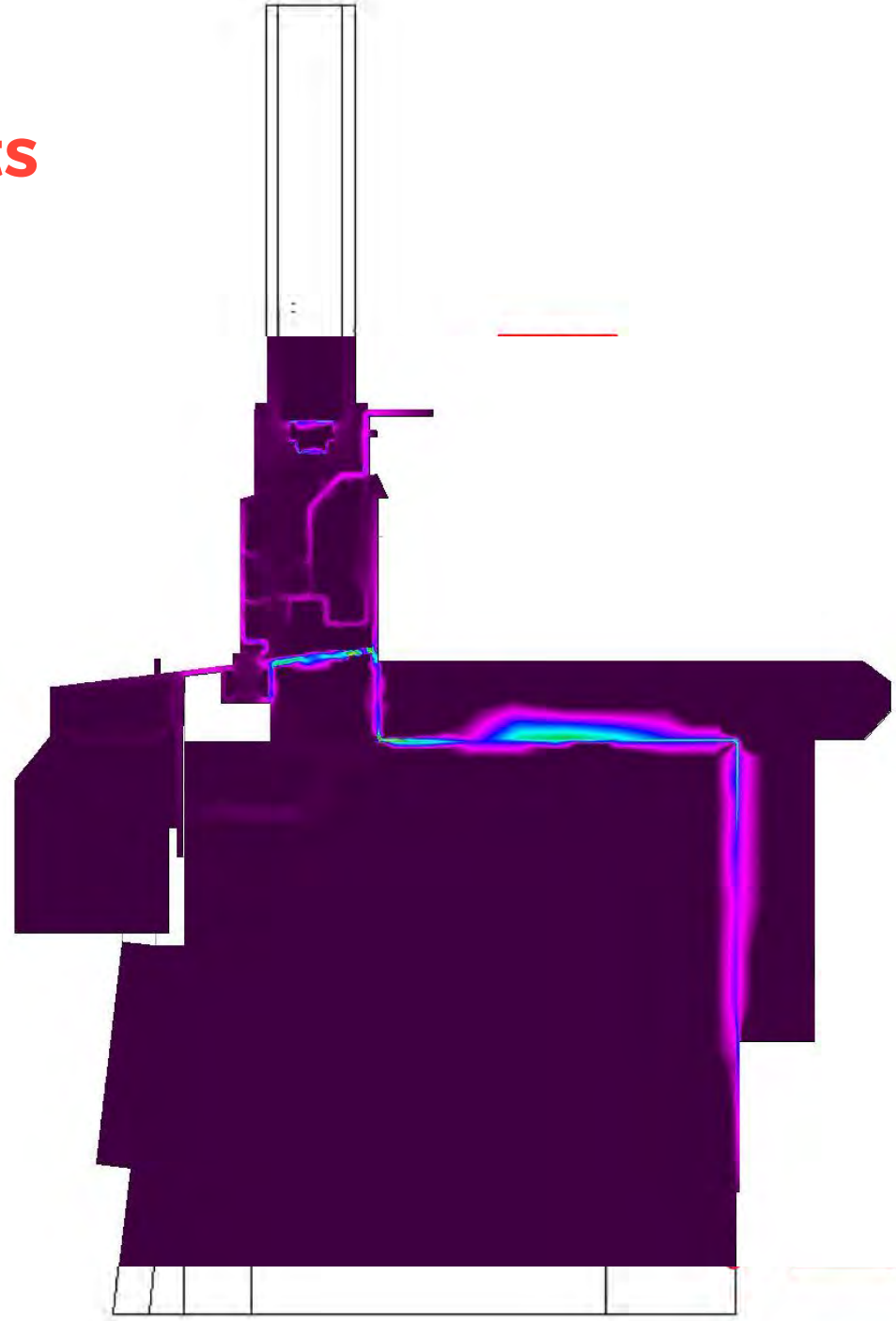

Field Test Design

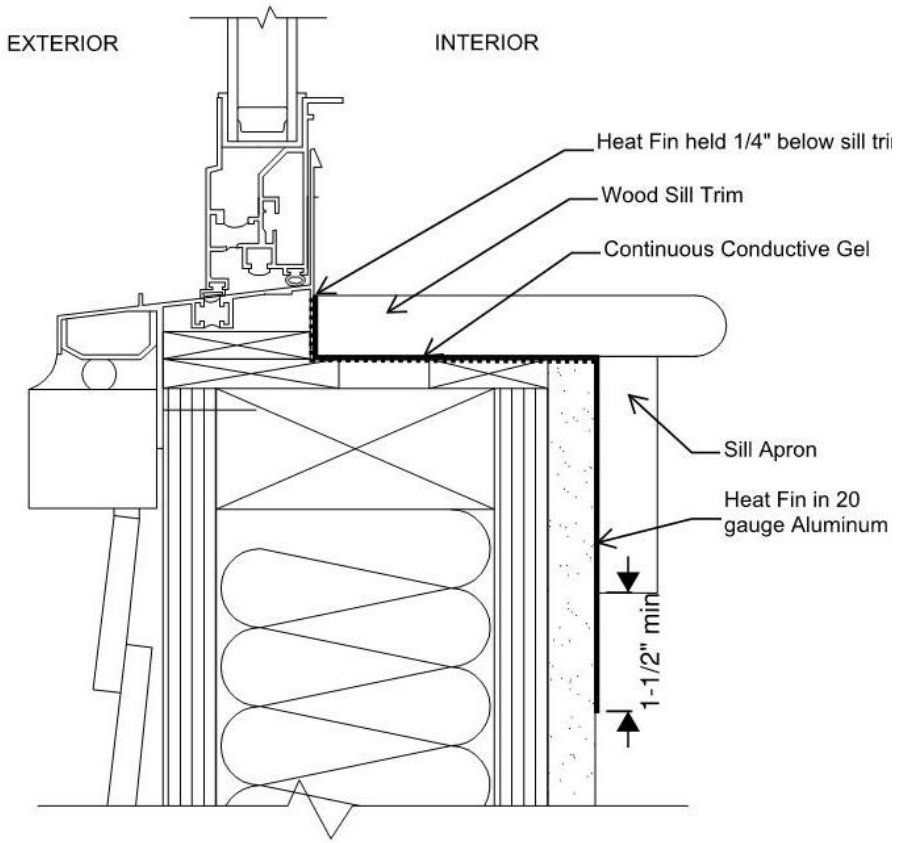

Designed Heat Fin

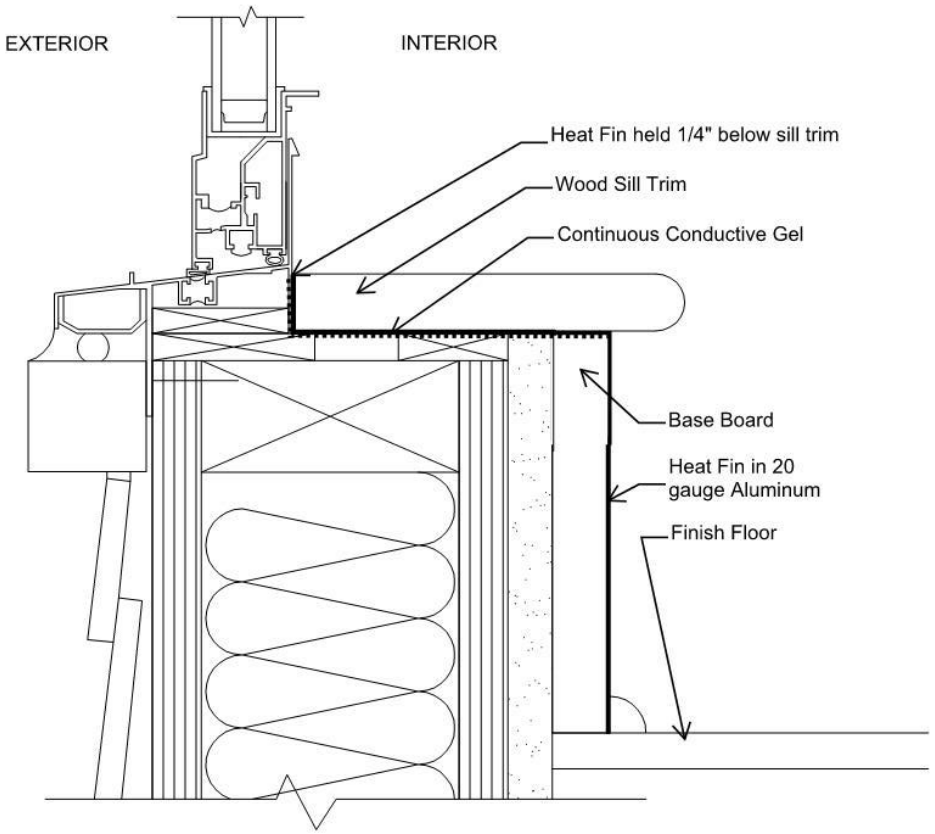

Field Modified Heat Fin

Field Test Install

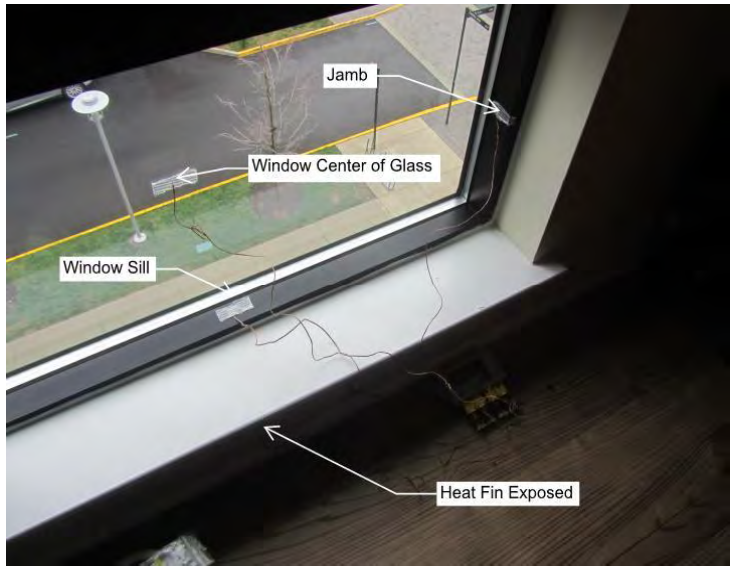

Limitations of Solution

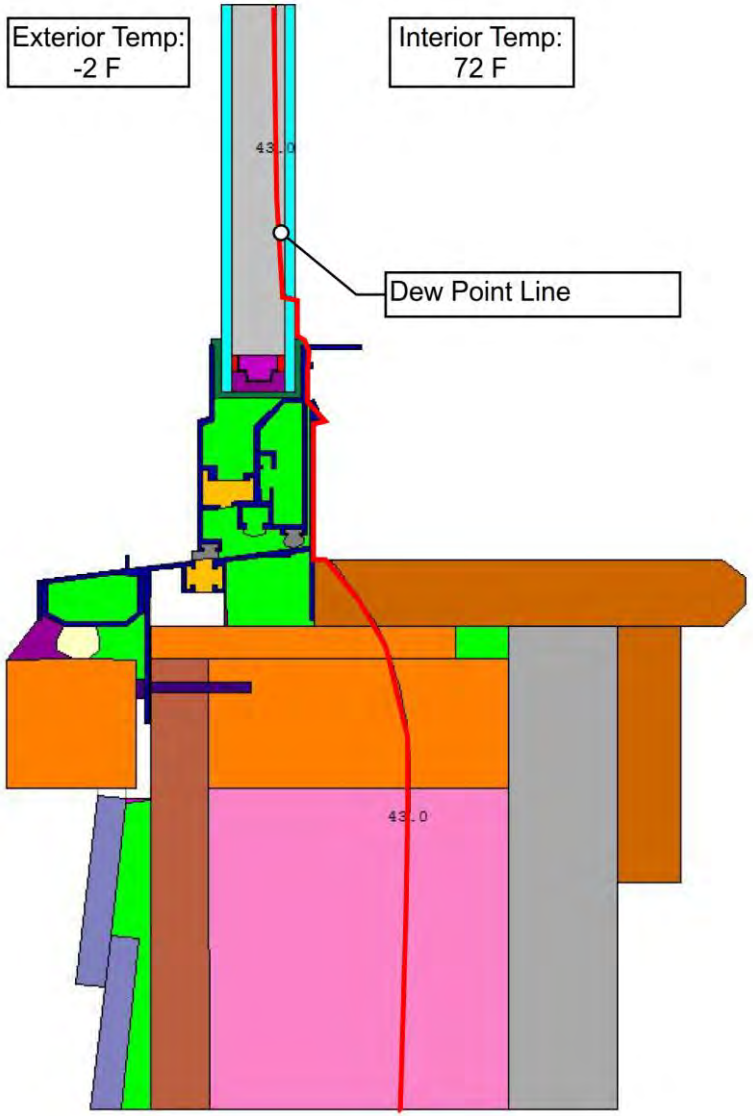

Without Heat Fin

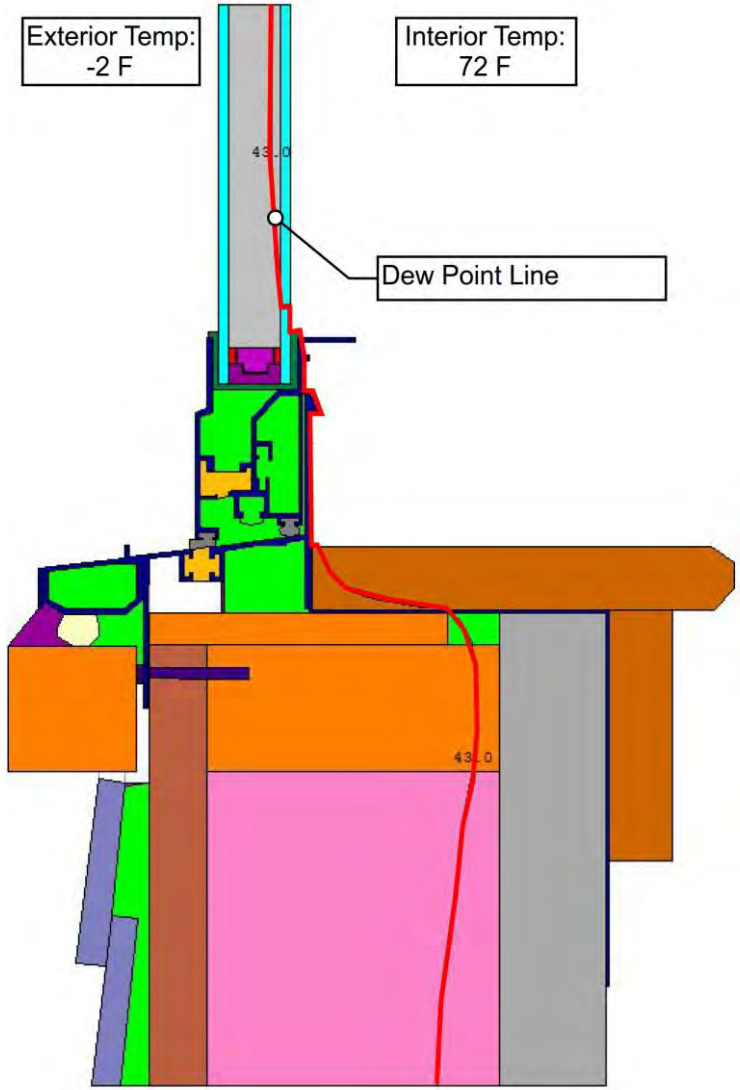

With Heat Fin

Limitations of Solution

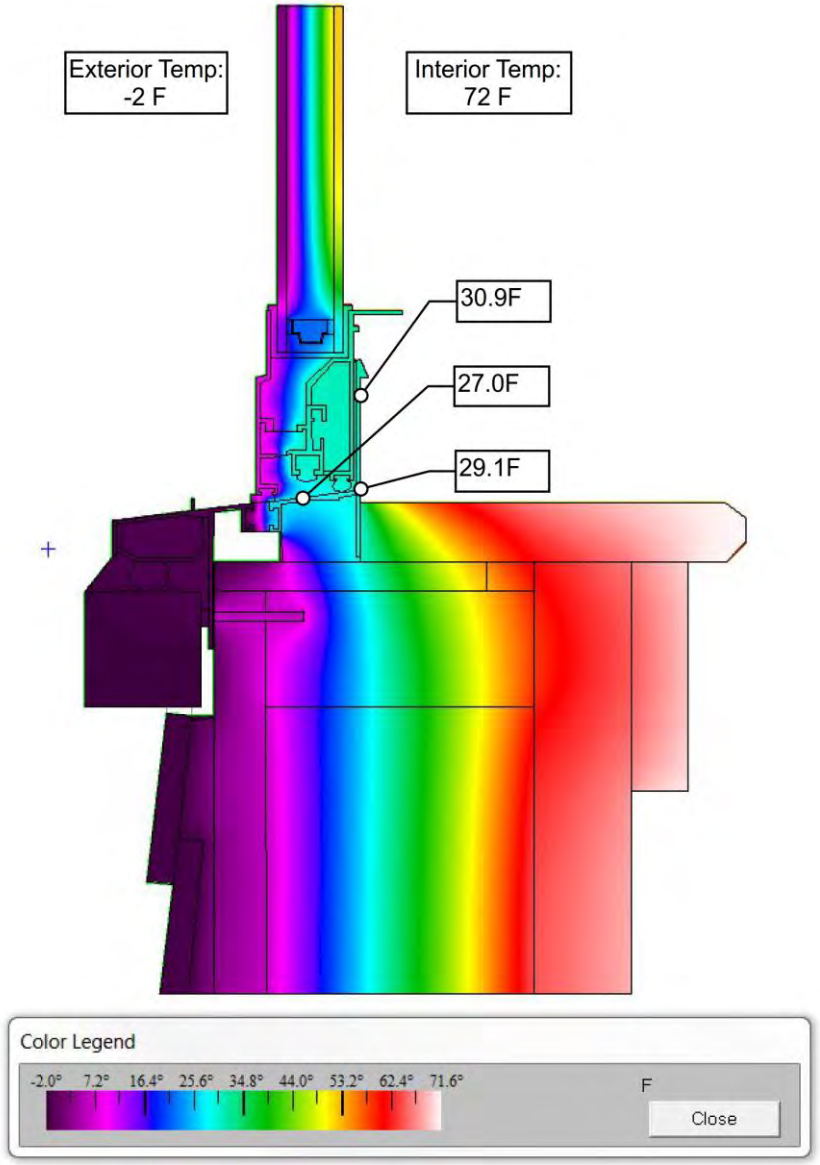

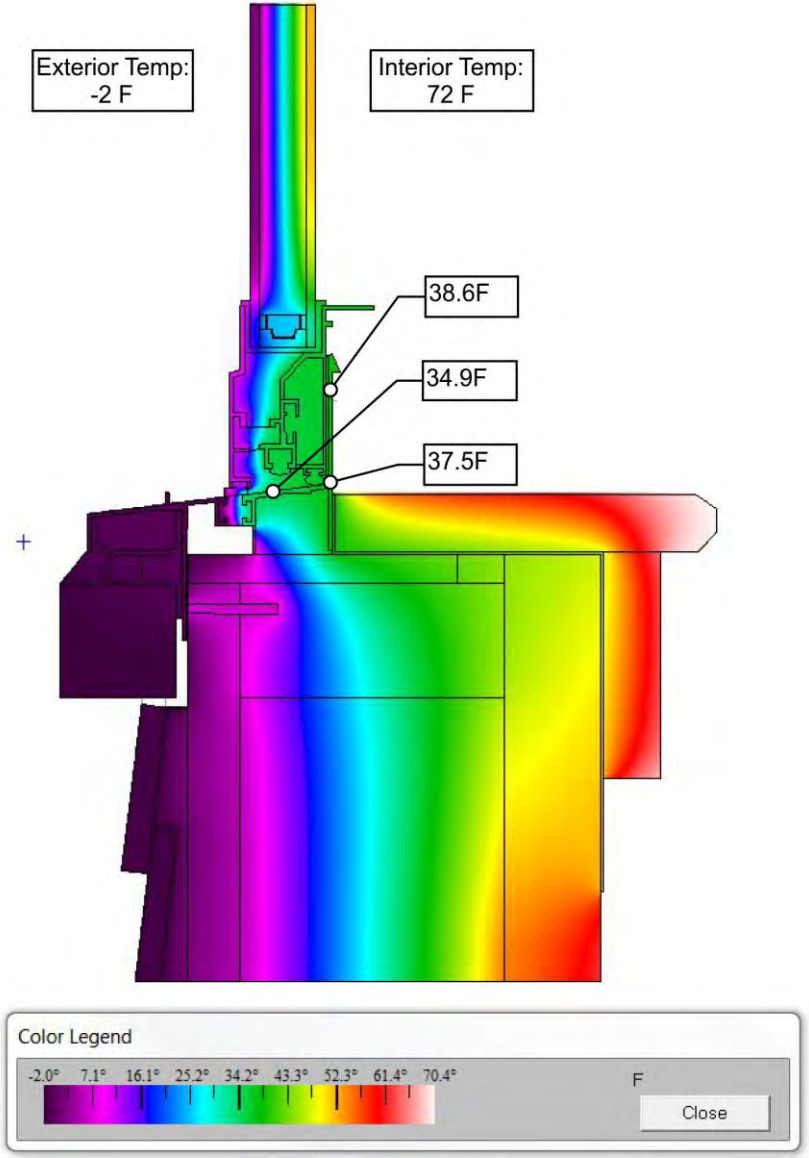

Beyond Conduction: Convection

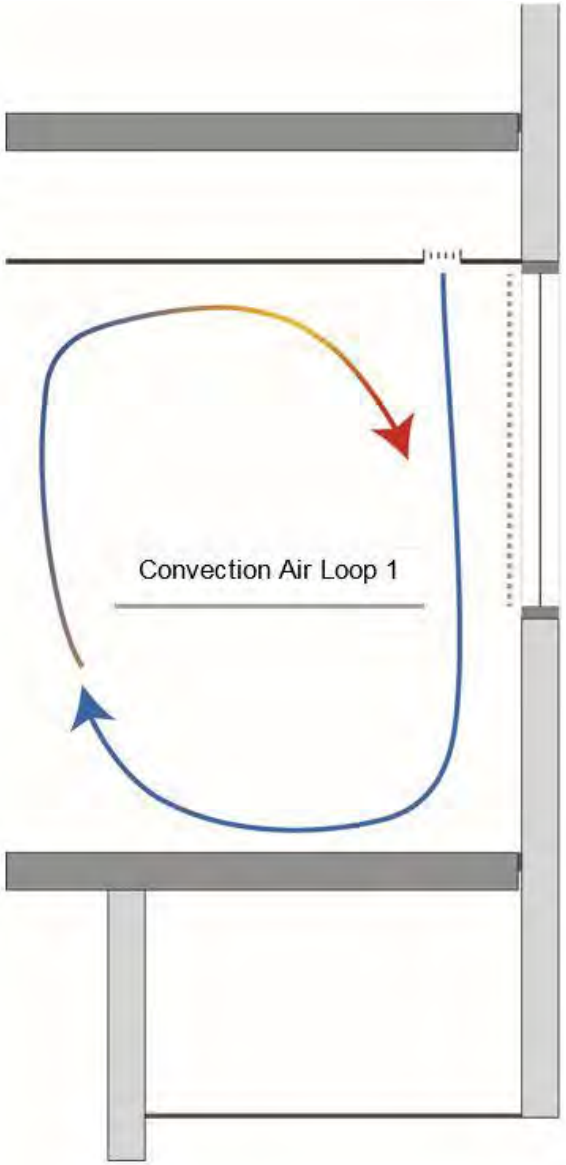

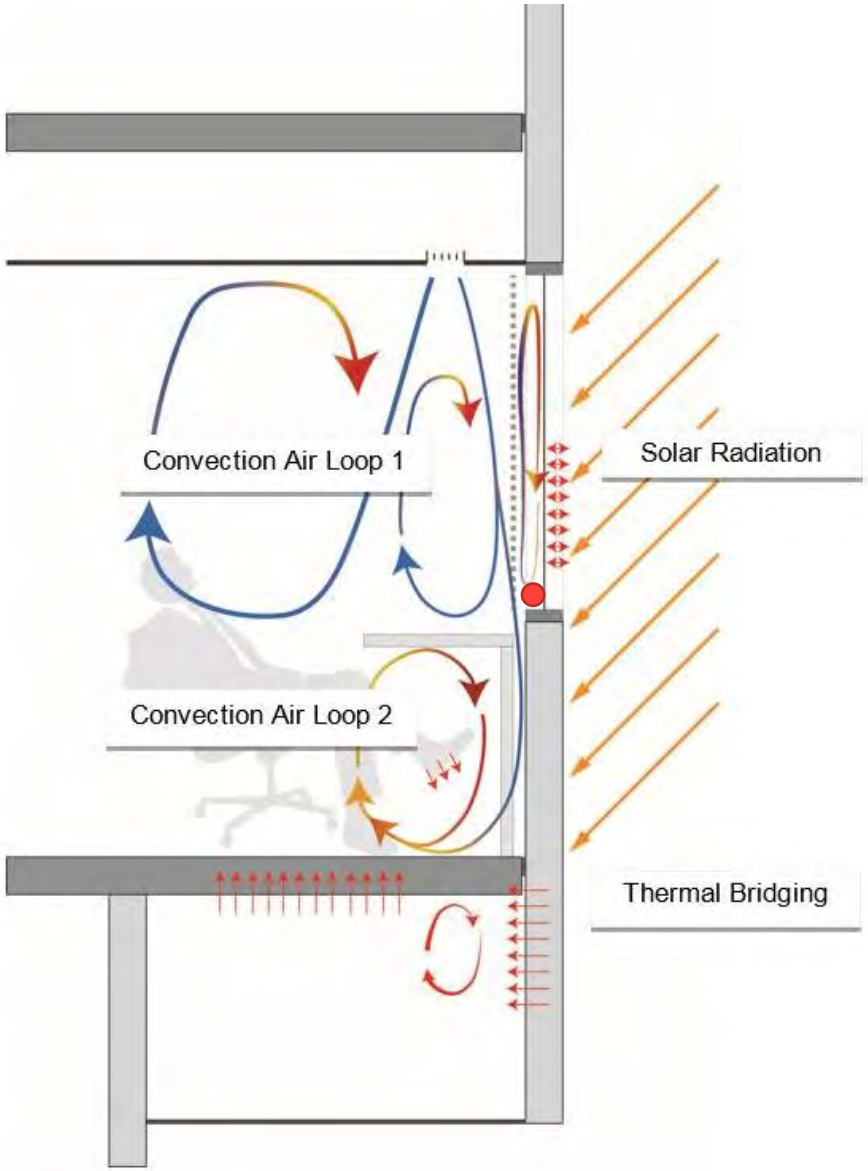

Beyond Conduction: Convection

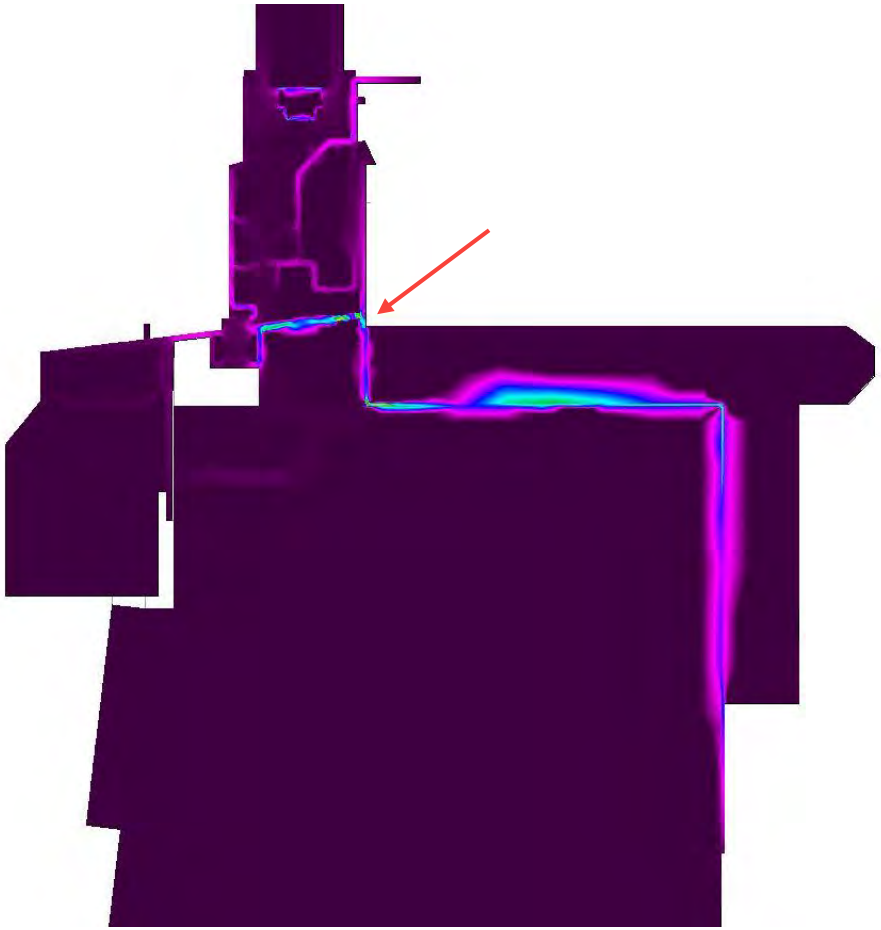

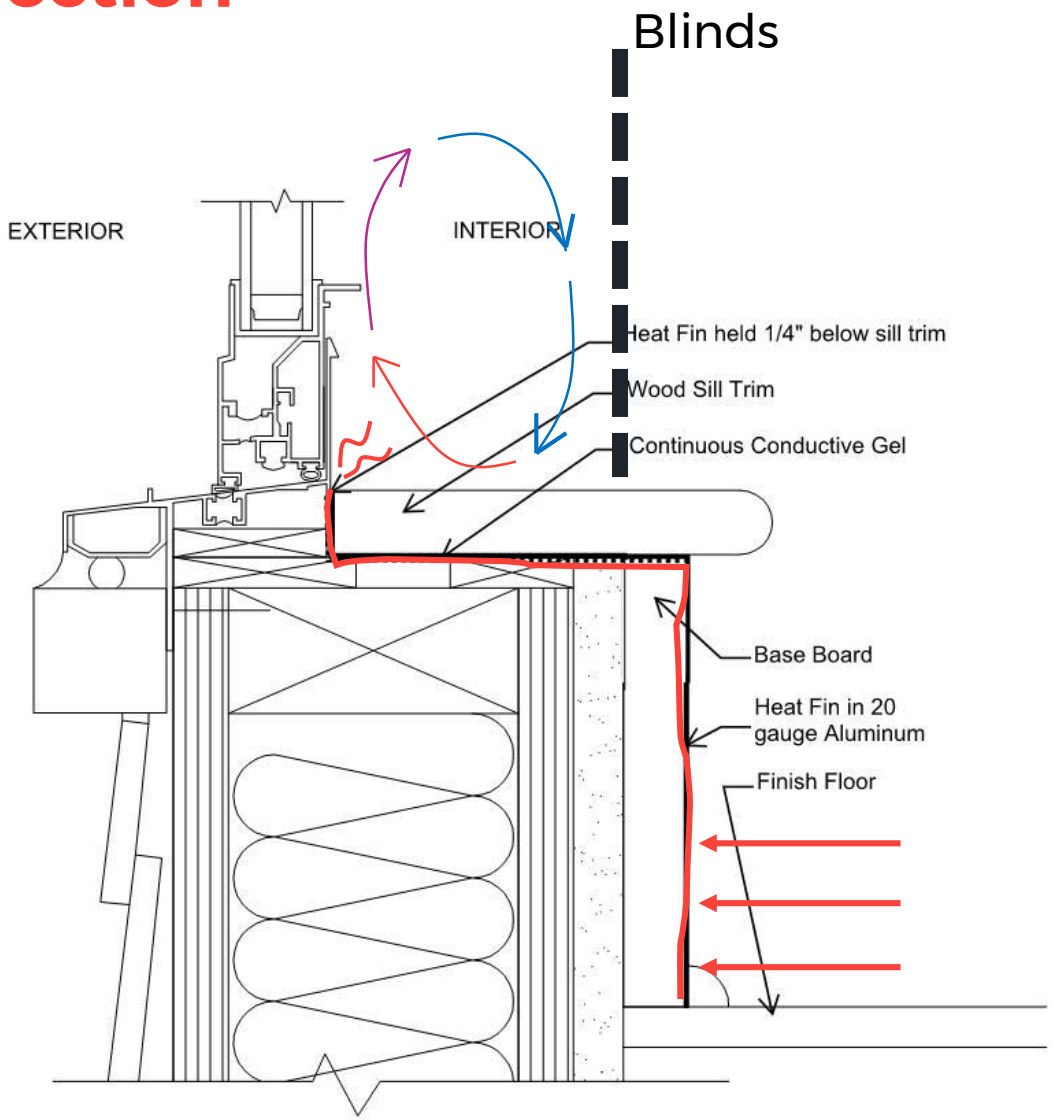

Beyond Conduction: Diffusion

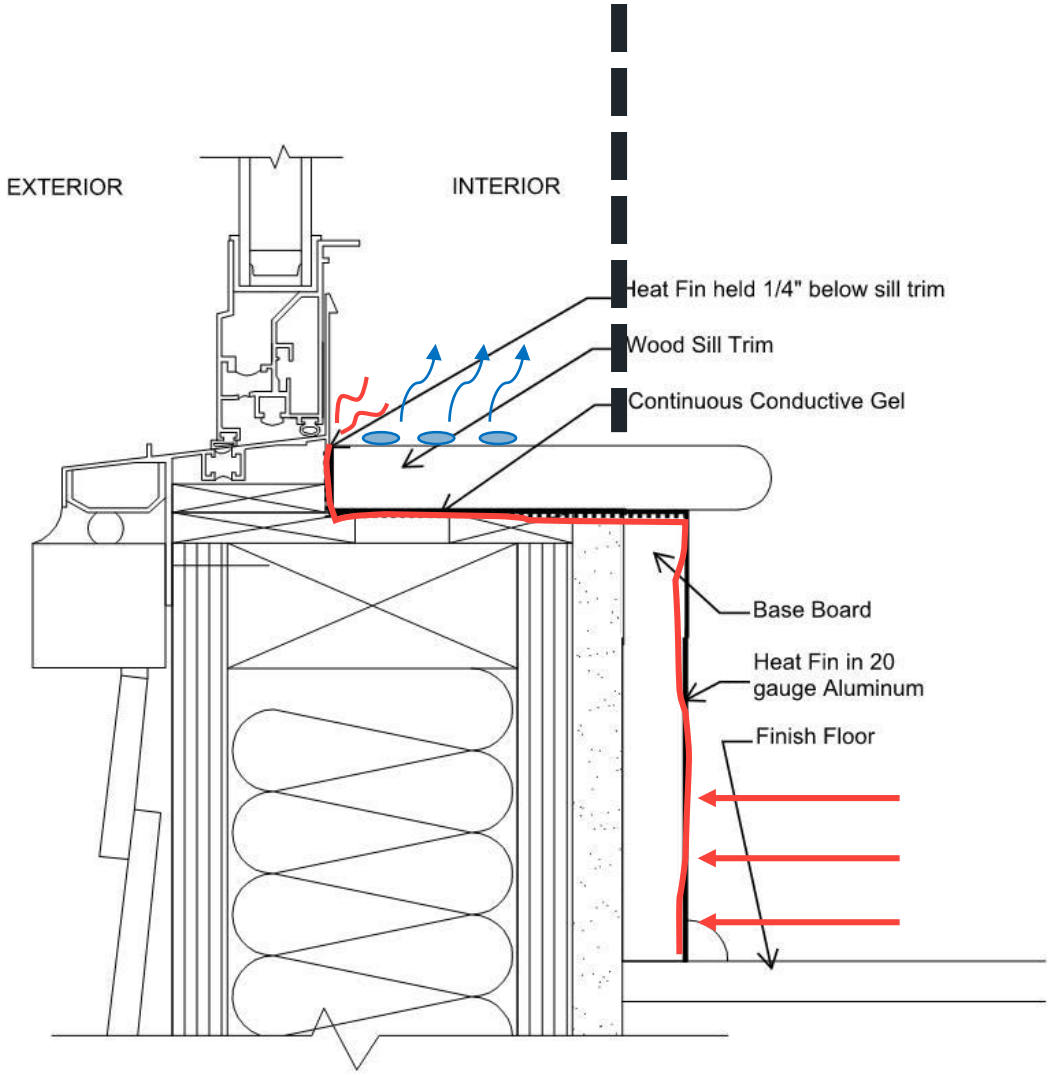

New Applications

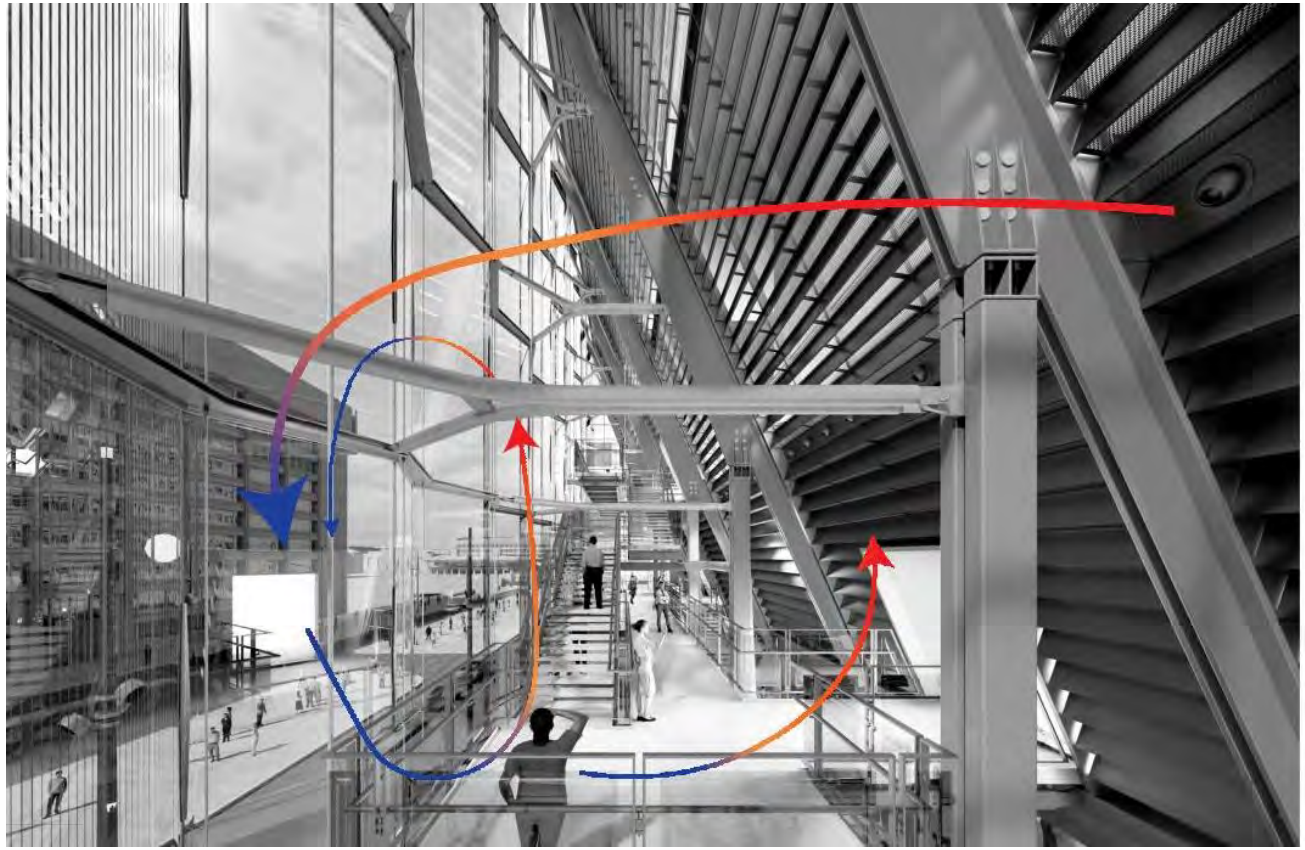

Convective loop formation as air nears the glass wall. Presence of people in the atrium contributes to heating up air and adds additional moisture load as the air moves across the people. Stack effect and additional mechanical flow to the high return for the space will drive air upwards in addition to the convective loops shown.

New Applications

Turning a large volume of exposed structure into a giant radiator of heat. Heat being driven directly into the exposed steel columns could be considered as this would increase heat flow to the curtain wall framing structure at each level. The structure becomes a passive heat fin. This would also drive convective loops from structure to ambient air (supplied air) and create better mixing of the air and reduce the risk of moisture build up.

WSP - A Global Professional Services Firm

Our Canadian Presence

7,600
EMPLOYEES

150
OFFICES

Sarah Buffaloe
Project Manager,
Building Enclosures, WSP
Washington, DC, USA
703-945-1472
sarah.buffaloe@wsp.com

Paul Totten
Vice President,
Building Enclosures, WSP
Washington, DC, USA
703-945-1469
paul.totten@wsp.com