IT'S TIME TO CHANGE BAIT: WHY AND HOW TO USE THERMAL COMFORT ANALYSIS IN DESIGN STAGE TO INFLUENCE ENCLOSURE AND HVAC DESIGNS.

Robert Bean, R.E.T., P.L. (Eng.)

ABSTRACT

This case study demonstrates the use of thermal comfort analysis in pre-construction document stages to improve enclosure performance; and drive choices in HVAC systems, improve plant efficiency and reduce building energy consumption.

North American building efficiency incentive programs carry universal messages of, "upgrade to lower energy bills" or "save money with building improvements". But statistically the buy-in by society to this messaging has been dismally low considering the dollars spent since the late 70's on public relations, marketing and program management (Sachs, 2014). In contrast, the rocky mountain institute (2015) reports that comfort (73%) and sound reduction (63%) was cited as the key reasons for enclosure improvements. That is to say metrics of indoor environmental quality (IEQ) drove decisions to improve the enclosure not energy efficiency. This messaging is at the root of the well building standard, active house, and living building challenge and to some extent r-2000 and passive house.

If a large part of the populace participating in upgrades is doing so for reasons other than energy; then one would think the brain trust concerned about energy would grasp on to this "free of friction" direction and reallocate funds towards promoting IEQ. Why? Because the end result reduces energy use (Bean, 2015). Indeed all the energy-centric crowd needs to do is look to the people of the oceans and seas who need to put fish in the boat, sometimes one has to change bait.

This "go with the flow" road is much easier to travel when considering sensing and perception of the indoor environment is programed into people's DNA; i.e., it's not necessary to teach people about discomfort - they already come conditioned to take steps to avoid it. On the other hand concepts around building and energy efficiency requires education; and while that exercise might be enjoyable for practitioners, an education on building science is not on the bucket list of most building owners and their inhabitants. It would be far easier, faster and more economical to teach the building industry the vocabulary of ieq and use this communication tool to improve buildings. The following case study is an example of this strategy using the metric of thermal comfort. The other metrics of IEQ including the quality of sound, air, light, odours, air and vibrations are equally important.

PROJECT DESCRIPTION

The original 116 m2 (1250 ft2) bungalow located in Calgary, Alberta was constructed in the early to mid-1900. The home was demolished with the exception of the original basement foundation walls, slab and subfloor. A new home was constructed on top of the existing basement and a new foundation for a new floor area of 381 m2 (4100 ft2) (see Figure 1). The original forced air system had been replaced by the owner with a relatively new (and oversized) 150 MBH condensing boiler to fan/coil system for the main floor; radiant floor heating in the basement and indirect fired domestic water heater. A DHW solar thermal system was installed shortly after 2010.

Figure 1: Southeast view of original and new home. Note the reclaimed solar system on roof.

Results of Thermal Comfort Analysis

Thermal comfort analysis was done prior to construction drawings using the ASHRAE Standard 55 Thermal Environmental Conditions for Human Occupancy tool, a proprietary Radiant and Downdraft Risk Assessment Tool and ASHRAE RP1383 Radiant Performance Explorer. ASHRAE RP1383 is a 3D modeling tool that explores the effects of inside surface temperatures on the mean radiant temperature, predicted percent dissatisfied and predicted mean vote as described by ASHRAE Standard 55.

Table 1: Original specifications and modifications post thermal comfort analysis. Note the non-compliance and compliance results.

Compliance with ASHRAE Standard 55 based on enclosure performance and choice of HVAC system (SI Units)									
Window Specs		Window U Value (cog)	Wall U Value (eff)	Clg U Value (eff)	Liv/Din Heat Loss	Liv/Din Flux	HVAC	ASHRAE Std 55 - PPD RPE Tool	ASHRAE Std 55 Compliance
		W/m² C	W/m² C	W/m² C	W	W/m²	Type	%	Y or N
Specified	2P/ Argon / 272 / Clear	1.87	0.34	0.18	3716	134	FA	24	N
Modified	3P / Argon / 272 / Clear / 180	1.08	0.22	0.18	3037	106	FA	20	N
Modified	3P / Argon / 272 / Clear / 180	1.08	0.22	0.18	3037	106	RFH	7	Y

Based on the Predicted Percent Dissatisfied (PPD) for each zone, recommendations were made to first improve the window performance from U = 1.87 to 1.08 (U = 0.33 to 0.19), and walls performance from U = 0.34 to 0.22 (U = 0.06 to 0.04). For example, using the living and dining rooms, Table 1 presents the

original specifications and necessary enclosure and HVAC modifications post thermal comfort analysis.

By making the enclosure modifications for comfort, a 23% reduction was achieved on the overall building load and 18% on the zone load shown above. However, due to the client's preference for the large window to wall ratio (WWR) for viewing Calgary's downtown, the discomfort risk assessment still demonstrated non-compliance with ASHRAE Standard 55. To compensate for the resulting low Mean Radiant Temperature (MRT) from the glass, it was necessary to switch the HVAC system from forced air to radiant floor heating (RFH). The RFH was able to raise the MRT from 20.4°C to 24.5°C (69°F to 76°F) moving the non–compliant PPD of 20% to a compliant 7% as shown in Figure 2.

Figure 2: ASHRAE RP 1383 Discomfort risk assessment tool: inputs for general factors and personal factors. Results showing non-compliant with forced air system (l), compliant with radiant floor heating (r).

Figure 3: Large WWR (l) lowered the MRT even with window and wall performance improvements (r).

Key metrics within ASHRAE Standard 55 were modelled in 3D using the ASHRAE RP-1383 tool. The color coded output screen paints the values for MRT, PPD and Predicted Mean Vote (PMV) as shown in Figure 4. As one would suspect discomfort risk increases as one approaches the colder surfaces of the enclosure. This discomfort is due to the negative downdraft and radiant effects caused by the large WWR. Such effects prey on the human body's ability to release approximately 60% of its sensible heat to colder

surfaces via radiation and another 15% by convection (Young et al, 2016).

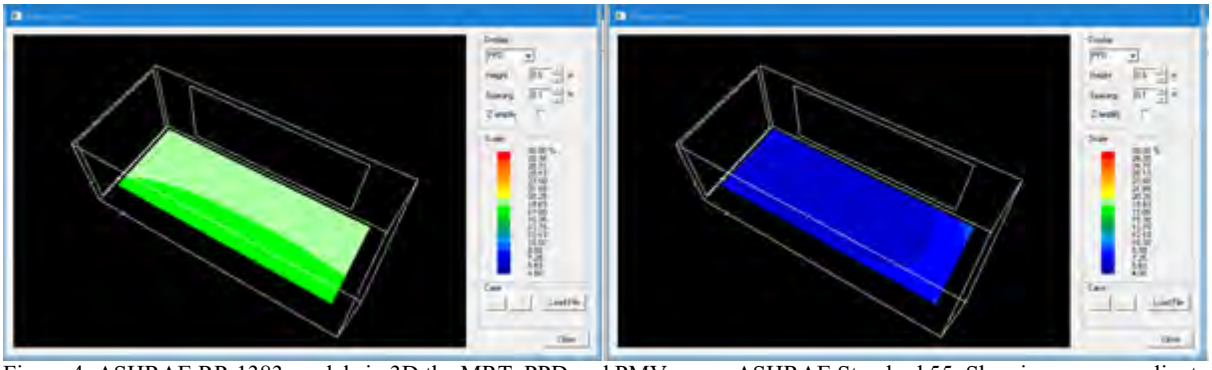

Figure 4: ASHRAE RP-1383 models in 3D the MRT, PPD and PMV as per ASHRAE Standard 55. Showing non-compliant HVAC system at 20% PPD (l) and compliant system at 7% (r). (Note: color slides available.)

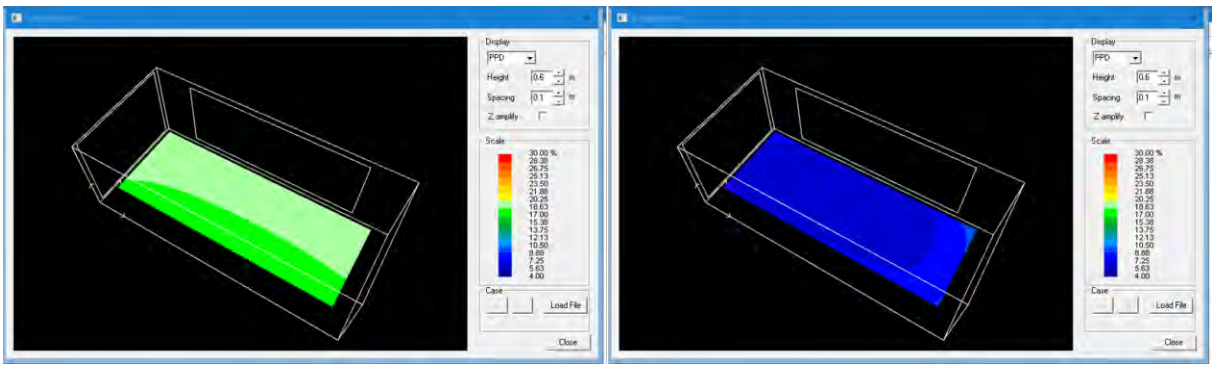

Figure 5 ASHRAE RP-1383 models in 3D the MRT, PPD and PMV as per ASHRAE Standard 55. Showing non-compliant HVAC system at 20% PPD (l) and compliant system at 7% (r). (Note: color slides available.)

CONCLUSION

Thermal comfort analysis is an under-utilized strategy. Since it speaks with a vocabulary easily accessible to consumers it can be a powerful tool to improve enclosure performance (Bean, 2016). It can also drive choices in HVAC systems, improve plant efficiency and reduce building energy consumption. In this practical example it was used to predict discomfort risks that were mitigated through improvements in the enclosure which led to reductions in energy loads. It also illustrates that even when improvements are made, thermal discomfort remains a byproduct with excessive WWR. Such excesses lead to low mean radiant temperatures in winter and high mean radiant temperatures in summer which can be solved with radiant solutions such as floor heating and cooling. Though not discussed here, the analysis also revealed that the condensing boiler would not have achieved its high efficiency rating since the intended fan/coil was selected based on a high log mean temperature difference (LMTD) temperatures rather than the low LMTD and resulting higher boiler efficiencies afforded by the radiant system.

REFERENCES

Sachs, M. 2014. The Business of Green Housing. Carleton Sustainable Energy Research Centre. <https://carleton.ca/cserc/20142015-lectures/business-green-housing-people-want-arent-willing-pay/ > accessed June, 2017

Rocky Mountain Institute, Unlocking the Future of U.S. Homes through Energy + Upgrades. <https://rmi.org/wp-content/uploads/2017/03/replus_unlocking_the_future_infographic_full.jpg> accessed June 2017

Bean, R. 2015. Why are we swimming upstream? Promote comfort and energy efficiency will follow. Seventhwave. <http://www.seventhwave.org/b4blog/why-swimming-upstream-promote-comfort> accessed June 2017

ASHRAE Standard 55 Thermal Environmental Conditions for Human Occupancy <http://comfort.cbe.berkeley.edu/> accessed June, 2017

Glazing and Winter Comfort Tool (Radiant and Downdraft Risk Assessment), Payette. < http://www.payette.com/building-science/glazing-and-winter-comfort-tool> accessed June, 2017

Young, K., et al (2016) Anatomy and Physiology, Rice University, Texas. <https://openstax.org/details/anatomy-and-physiology> accessed June, 2017

Bean, R. 2016. Thermal Comfort Quality. ASHRAE Residential Building Committee Stakeholders Workshop, Washington, D.C. <http://www.healthyheating.com/2016.ASHRAE.RBC.Washington/2016.ASHRAE.RBC.Washington.htm> accessed June, 2017