WINDOW SILL PAN FLASHINGS: ARE LIQUID MEMBRANES SUITABLE?

Michael Wilkinson, M.Eng, EIT, Jun Tatara, Dipl.T., Graham Finch, MASc., P.Eng,
RDH Building Science Inc.

ABSTRACT

One of the biggest unknowns and widely debated topics for liquid-applied membranes is whether they are suitable for application on a horizontal or near horizontal wood surface, such as on window sill, on top of a curb, or under a parapet flashing. Conventional wisdom suggests that waterproofing in horizontal applications should be impermeable to moisture, like most peel and sticks and roofing membranes. There is more than enough evidence within the window and roofing industry to demonstrate that building paper and vapour permeable sheet sheathing membranes cannot be safely used on horizontal surfaces without leading to moisture damage. In these applications, industry most commonly uses impermeable peel and stick membranes.

There are, however, several new liquid-applied flashing membranes that may be suitable for use in localized horizontal waterproofing applications, provided they are water repellant, durable enough and do not remain under ponding water for prolonged periods of time. These liquid membranes can also have other benefits in terms of ease of use, workability, and compatibility with other materials used to complete the window installation. They may also allow for some outward drying when applied to damp wood.

Material testing and evaluation has been performed on a range of available permeable to impermeable flashings, tapes and liquid membranes to help determine which characteristics would be required for a window rough opening sill applications. This paper provides the results of a series of novel test protocols to evaluate the performance of various liquid membranes in a window sill application.

INTRODUCTION AND BACKGROUND

The use of liquid flashing membranes is expanding in many North American construction markets for several reasons including ease of application, compatibility with common detailing materials, and their fully adhered/monolithic nature. As the application of liquid products continues to grow, lingering questions remain as to their efficacy in horizontal applications such as at the sill of window rough openings.

The waterproofing of horizontal surfaces has long been the domain of vapour impermeable self-adhered membranes (SAMs) due to their known effectiveness in roofing and waterproofing applications. However, vapour permeable liquid membrane flashings may be suitable in certain horizontal applications, such as at wood-frame window rough opening sills or at the top of parapets. Among other factors, the utility of

permeable liquid membrane flashings is dependent on balancing their potential for enhanced drying versus their potential negative water transmission properties:

1) *Wetting potential* – vapour permeable membranes may allow for inward wetting in horizontal applications exposed to ponding moisture.

2) *Drying potential* – vapour permeable membranes may allow for outward drying when applied to initially wetted wood, as compared to vapour impermeable membranes which only allow for inward drying.

Note that of these two properties, preventing wetting is typically more important than accelerating drying when waterproofing horizontal surfaces. Additionally, the ability of liquid flashings to overcome the imperfections and gaps often present at the sill of wood-frame window rough openings is considered a critical consideration.

In our experience, existing industry guidelines and standards, including current ASTM, ABAA, or AAMA test standards, do not adequately cover the use of liquid-applied membranes as horizontal flashings below windows. While there are several competing sheet- and liquid-applied flashing membrane systems with a range of different chemistries and installation details being sold into the market, the current lab testing methodologies do not appear to sufficiently cover important performance metrics including the long term water ponding resistance and the gap bridging abilities of liquid-applied products. Table 1 below lists commonly referenced membrane flashing standards. Note that the highlighted AAMA standards include several tests covering material properties ranging from water vapour permeability (ASTM E96) to cold temperature pliability (ASTM C734).

Table 1: Commonly Referenced Flashing Membrane Standards

Standard	Description
AAMA 711-13	Voluntary Specification for Self-Adhering Flashing Used for Installation of Exterior Fenestration Products
AAMA 714-15	Voluntary Specification for Liquid-Applied Flashing Used to Create a Water-Resistive Seal Around Exterior Wall Openings in Buildings
AATCC 127	Water Resistance: Hydrostatic Pressure Test

In order to better understand the efficacy of permeable liquid membranes when installed as a sill pan flashing, a series of novel tests were conducted to evaluate liquid membrane performance in this application. The long-term water ponding resistance, drying potential, and crack bridging capability of several liquid membrane chemistries was assessed to determine how they measure up against other membrane flashing materials. This paper is a summary of select findings from a larger study completed by the authors.

PERFORMANCE EVALUATION

Wetting Evaluation: Long-Term Water Ponding Resistance

In the field, the sill of window rough openings is occasionally exposed to ponding water. The ability of the sill pan flashing to resist water absorption in this situation is critical to the overall durability of a building. To better understand the performance of liquid membrane flashings in this application, a sampling of membrane flashings with varying chemistries and characteristics was applied to a series of simulated wood-frame rough openings and then exposed to water ponding over several weeks. The chemistries and permeance of the evaluated sill flashing materials can be seen below in Table 2 as taken from the respective manufacturers' technical literature.

Table 2: Sill Flashing Materials and Permeance (From Technical Literature)

Sample ID	Flashing Membrane	Chemistry	Vapour Permeance (ASTM E96: Method B)
L01	Liquid-applied membrane	Silyl-terminated-poly-ether	21 perms
L02	Liquid-applied membrane	Water-based acrylic	23 perm
L03	Liquid-applied membrane	Silicone-based	~3 perms
L04	Liquid-applied membrane	Water-based acrylic	13 perms (ASTM D1653B)
S01	Vapour permeable SAM	3-Ply polypropylene	50 perms
S02	Vapour impermeable SAM	Polyethylene faced	0.08 perms

Procedure

The wetting evaluation involved applying different flashing membranes to a modified 2x6 wood sill apparatus with OSB sheathing on one side and plywood sheathing on the other. This allowed for OSB and plywood sheathing edges, and dimensional lumber to be tested simultaneously within one sample under similar laboratory conditions. A tank was created to allow water to pond uniformly on the membrane-covered edges of the plywood and OSB, and the membrane-covered surface of dimensional lumber, thereby replicating a typical window rough opening (Figure 1). The liquid-applied membranes were applied to the sill and jambs of the 2x6 framing and to the face and edges of the plywood and OSB sheathing, respectively. Acrylic panels were installed on both sides of the test apparatus with sealant applied between the sheathing and acrylic panels in order to isolate the sill surface.

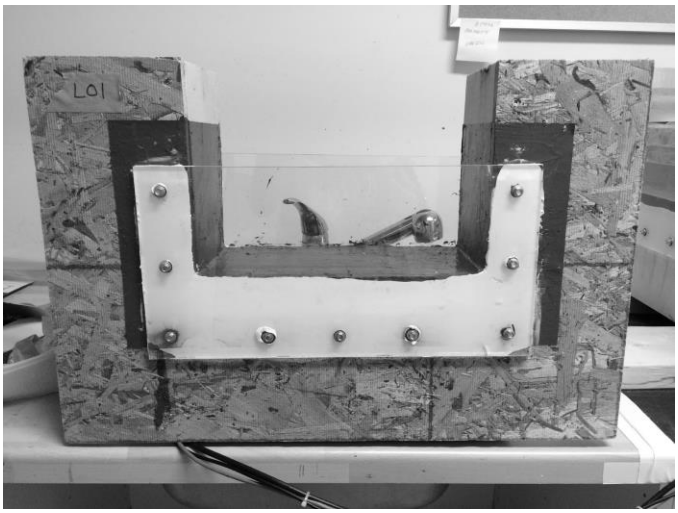

Figure 1: Completed mock-up with 2x6 wood sill and plywood and OSB sheathing on either side with liquid membrane applied

All liquid-applied membranes were installed, in accordance with each manufacturers' instructions. A wet mil gauge was used to ensure that the required application thicknesses (from manufacturer's literature) were consistent across the specimens (Figure 2).

Figure 2: Wet mil gauge was used to measure applied thickness of liquid-applied flashing membranes

Within each mock-up, electrical resistance moisture content sensors (SMT PMM sensors, custom direct-wired connections) were embedded into the underside and interior of the wood elements at key locations (Figure 3). The moisture content sensors were installed from the bottom of the mock-up prior to installing the liquid-applied membranes.

Figure 3: Underside of mock-up with 4 moisture sensors embedded into wood elements at key locations

A total of 4 moisture sensors were installed to monitor the moisture content of the wood during testing as illustrated in Figure 4:

1) 2x6 sill at centre - 4.8mm (3/16") to 6.4mm (¼") from the surface
2) 2x6 wood sill at edge - 4.8mm (3/16") to 6.4mm (¼") from the surface
3) ½" plywood edge at centre – 12.7mm (½") to 19mm (¾") from the exposed edge
4) 7/16" OSB edge at centre – 12.7mm (½") to 19mm (¾") from the exposed edge

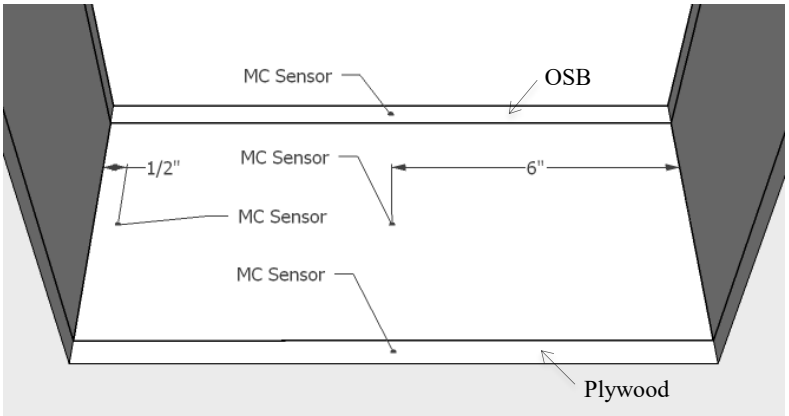

Figure 4: Illustration indicating location of 4 moisture sensors

Once the modified 2x6 wood sills were prepared, 51mm (2") of water head was applied to the sill of each specimen and monitoring commenced for the next 6 weeks (42 days). While not expected in the field, 51mm (2") of water head was selected as the laboratory test condition to allow for observation and monitoring of moisture uptake over a more accelerated timespan.

After completion of the initial water ponding test, the window sill specimens were emptied of water (and dried) and relocated to an outdoor rooftop in Vancouver, BC for a 25-week (174-day) period. All failed membrane flashings were repaired/patched prior to specimens prior to being relocated to the rooftop. Over the testing period, moisture content measurements (centre of sill, edge of sill, edge of OSB, edge of plywood) were taken as the specimens were exposed to the elements (solar radiation, rainwater) and consequently experienced wetting and drying cycles. Note that the mock-ups were not altered in anyway nor water was emptied from the tank after rain events.

Results and Discussion

Figure 5, Figure 6, and Figure 7 present the results of the initial water ponding testing for the moisture sensors located at the center of the 2x6 wood sill, at the edge of the plywood, and at the edge of the OSB, respectively. The measured moisture content values indicate differences in the properties of the test membranes; however, differences in wood materials (plywood, OSB, dimensional lumber) and workmanship (e.g. membrane application at the joint between OSB/plywood sheathing and dimensional lumber) also had an effect. Note that the vapour-permeable self-adhered membrane sample was terminated after 4 days as the sample leaked due to failure of the lap adhesives leading to significant water absorption into the wood framing. Additionally, the L04 sample (water-based acrylic) was terminated after 5 days when excessive water absorption and subsequent swelling of underlying OSB led to membrane failure.

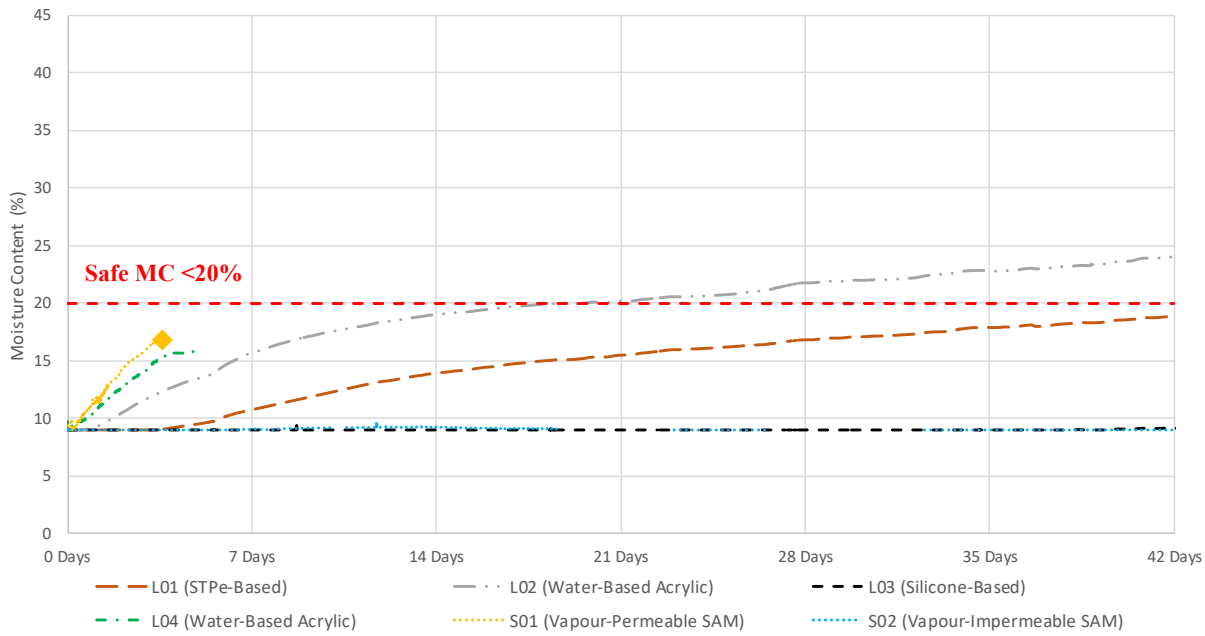

Figure 5: Moisture content of 2x6 wood sill at center with 51mm (2") of water over the 42-day monitoring period (Yellow and green squares indicates termination of test due to leakage)

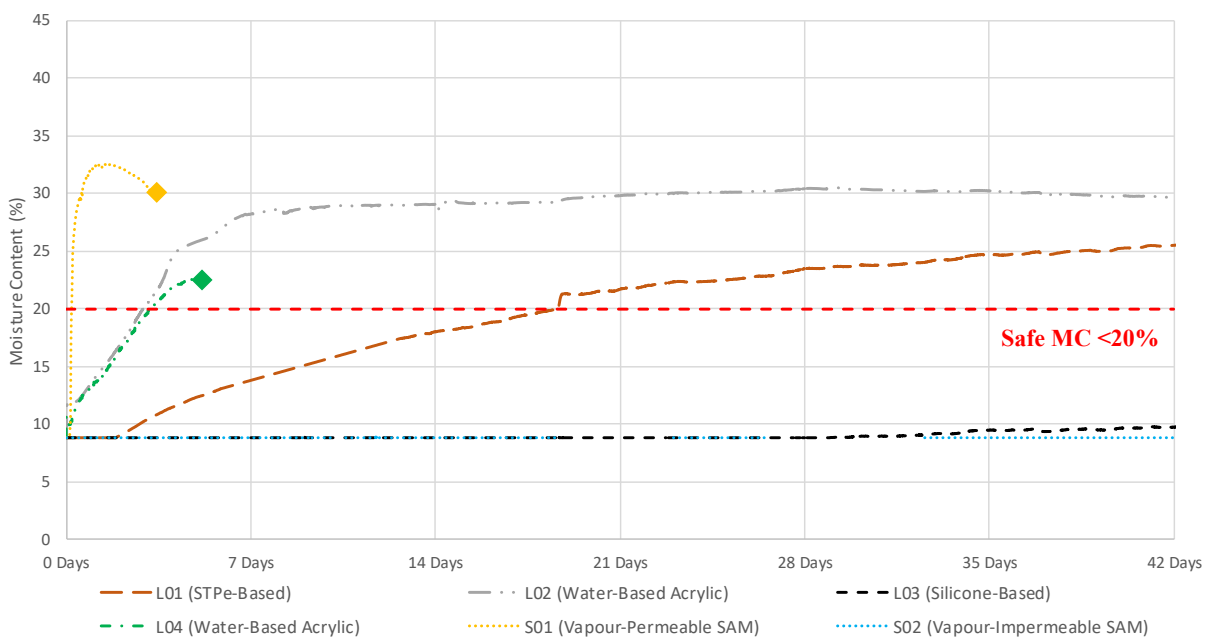

Figure 6: Moisture content of plywood edge with 51mm (2") of water over the 42-day monitoring period (Yellow and green squares indicate termination of test due to leakage)

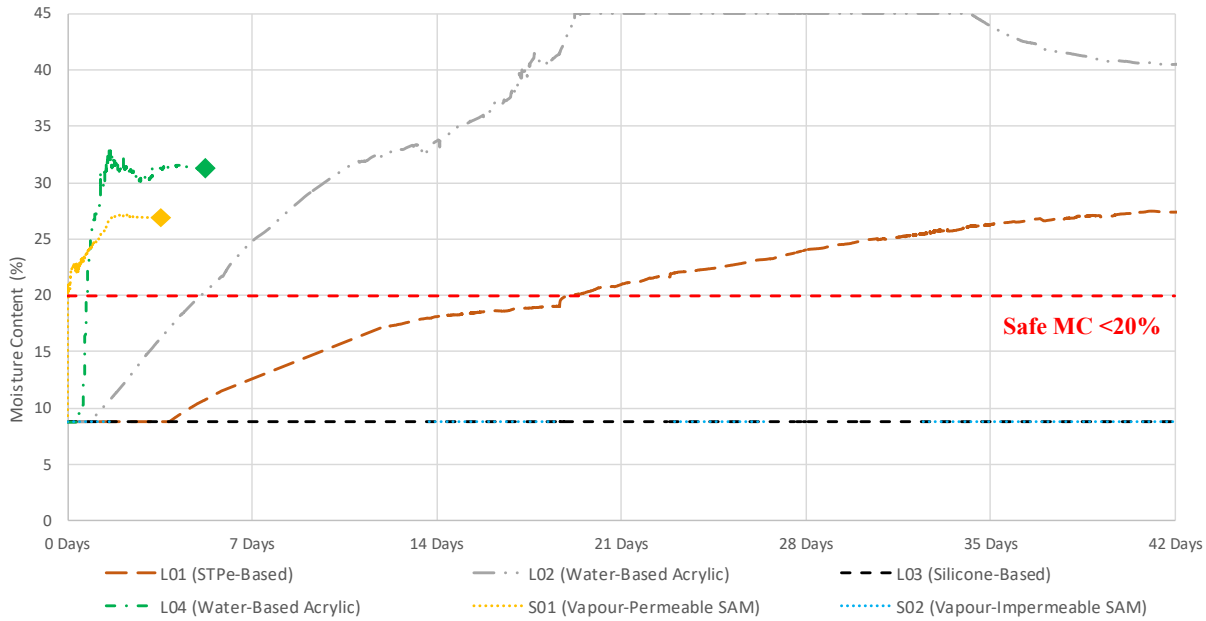

Figure 7: Moisture content of OSB edge with 51mm (2") of water over the 42-day monitoring period (Yellow and green squares indicates termination of test due to leakage)

The results of the long-term moisture content monitoring are indicated below. Figure 8 displays the daily average moisture content readings at the edge of the OSB taken over the 25-week monitoring period. Note that a rainstorm near the end of May resulted in significant water ponding in the mock-up tanks which led to a corresponding increase in measured moisture contents.

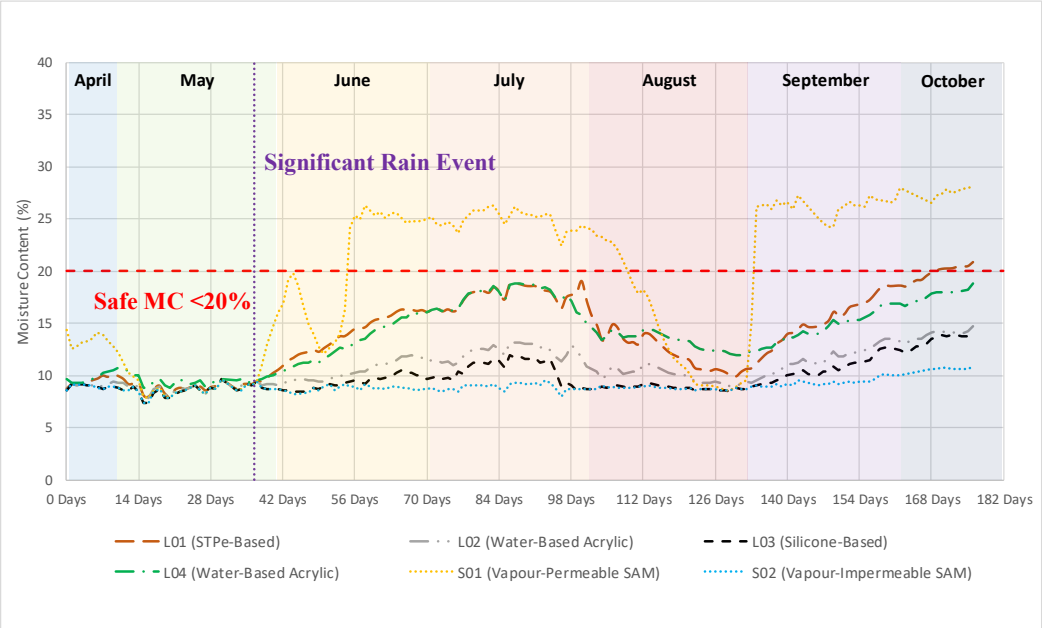

Figure 8: Moisture content of OSB edge over 25-week monitoring period (Vertical dotted line at end of May indicates a significant rain event that led to water ponding over the specimens)

The results from this wetting evaluation provide several useful insights into the moisture absorption characteristics of horizontally applied liquid membrane flashings. The test results suggest the following:

1) *Sheet membrane (S01, S02) flashing performance is consistent with field observations* – many wood-frame failures have been attributed to application of vapour-permeable self-adhered membranes in sill applications. The test results support our field experience that this type of membrane installed at the sill of window rough openings is not good practice. In contrast, vapor-impermeable self-adhered membranes are known to provide acceptable field performance, and the vapour-impermeable self-adhered control membrane confirmed this as well. If a long-term water ponding resistance testing protocol were to be standardized, data collected here from permeable and impermeable self-adhered membranes could help inform failure and passing criteria, respectively.

2) *Plywood and OSB sheathing is more vulnerable to moisture uptake and decay* – the properties of engineered wood (plywood, OSB) and the exposure of the end grain led to significantly greater water absorption as compared to the uncut side of the wood sill plate. This indicates that moisture flow through liquid-applied sill membranes is likely to first occur at the sheathing in wood-framed window rough openings. Sufficient moisture flow occurred through some of the liquid-applied membranes to cause swelling of the underlying OSB. This lead to the formation of gaps/cracks in the OSB and between the OSB and wood sill plate resulting in membrane tears and eventual membrane failure (Figure 9). Excessive moisture absorption at the edge of the OSB resulted in mold growth at the interface between the OSB and 2x6 dimensional lumber on the underside of some specimens (Figure 10).

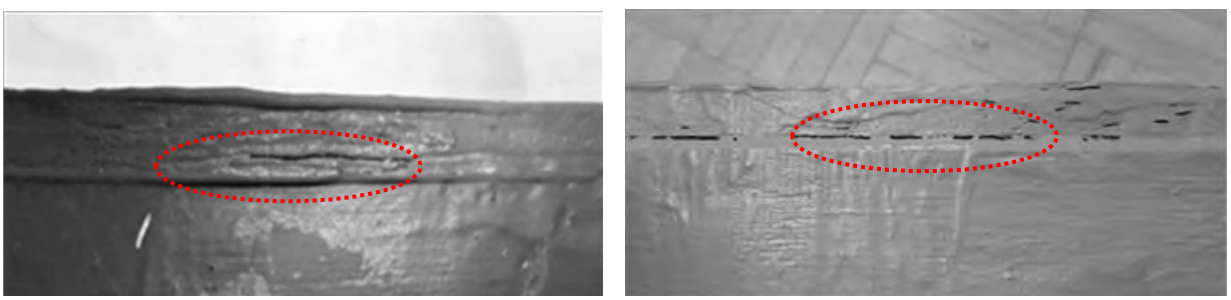

Figure 9: Excessive moisture absorption leading to swelling of the OSB and tears in L01 (on the left) and L04 (on the right).

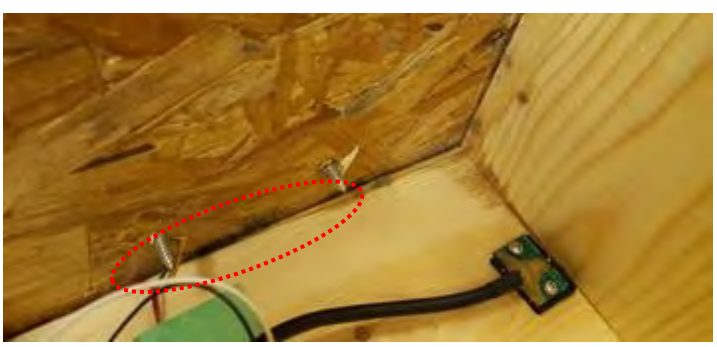

Figure 10: Visible mold growth on the underside of the L02 specimen on the OSB

3) *Liquid membrane chemistry matters* – the chemistry of the tested products has a significant impact on the performance of the membrane flashings. While it was expected that the impermeable self-adhered membrane (S02) would effectively resist wetting and the vapour-permeable self-adhered membrane (S01) would not, the tested liquid membrane products exhibited variability in their performance. Water-based acrylic membranes (L02, L04) appear to be sensitive to water ponding, while silicone membranes of an appropriate thickness (L03) exhibit performance similar to an impermeable peel-and-stick membrane. STPe membrane (L01) chemistries ranked between the thick silicone and water-base acrylic membranes with respect to uptake of moisture through the permeable membrane over time.

Drying Potential Evaluation

While water ponding resistance is a material concern for liquid-applied flashing membranes, their potential for enhanced drying is often considered a benefit. Commonly, wood materials are wetted during construction, particularly in the Pacific Northwest, with limited opportunity for drying to occur for months on end. This can lead to elevated moisture content in non-pressure preservative treated wood materials and a corresponding increased risk of mold growth. The application of vapour-impermeable peel-and-stick membranes to wood materials such as at the sill of window rough openings, can further impede drying. Conversely, vapour-permeable liquid membrane flashings may allow for enhanced drying (eg drying through the interior and exterior face of the window sill plate) and consequently improved durability in the building provided they are sufficiently water repellant. As such, a drying potential evaluation was conducted of wetted wood elements commonly found at the sill of window rough openings to determine if there are significant drying benefits associated with liquid membrane flashings. Similar to the water ponding resistance evaluation, testing was also performed on a combination of vapor-permeable and vapor-impermeable self-adhered membranes in order to represent the boundaries for drying of the initially wetted wood elements. Note that this testing scenario only looked at the application of membrane over a single 2x6 plate at a window sill; the impact of outward drying would likely be more pronounced at built-up beams or studs found at the head or jambs of window rough openings where inward drying is more limited. The chemistries and permeance of the evaluated membrane flashing materials can be seen below in Table 3 as taken from the respective manufacturer's technical literature.

Table 3: Membrane Flashing Materials and Permeance (from Technical Literature)

Sample ID	Flashing Membrane	Chemistry	Vapour Permeance (ASTM E96: Method B)
L01	Liquid-applied membrane	Silyl-terminated-poly-ether	14 perms
L02	Liquid-applied membrane	Silicone-based	6.5 perms
S01	Vapour permeable SAM	3-Ply polypropylene	50 perms
S02	Vapour impermeable SAM	Polyethylene faced	0.08 perms

Procedure

In order to evaluate the drying potential of flashing membranes installed on substrates exposed to construction moisture, wetted window sill samples were constructed out of 2x6 dimensional lumber and plywood sheathing. The tested flashing membranes were installed per the manufacturer's instructions to the top of the 2x6 lumber and to the face and edge of the plywood sheathing. A wet mil gauge was utilized to verify that the liquid-applied membranes were applied to the correct thicknesses. Vapor-impermeable membrane (peel-and-stick) was applied to the sides and edges of the window sill and sheathing to minimize the drying that could occur through the sides of the specimens. The underside of the specimens was left untreated in order to simulate the typical sill plate condition. An illustration of a typical test specimen prior to liquid-applied flashing membrane application is provided in Figure 11.

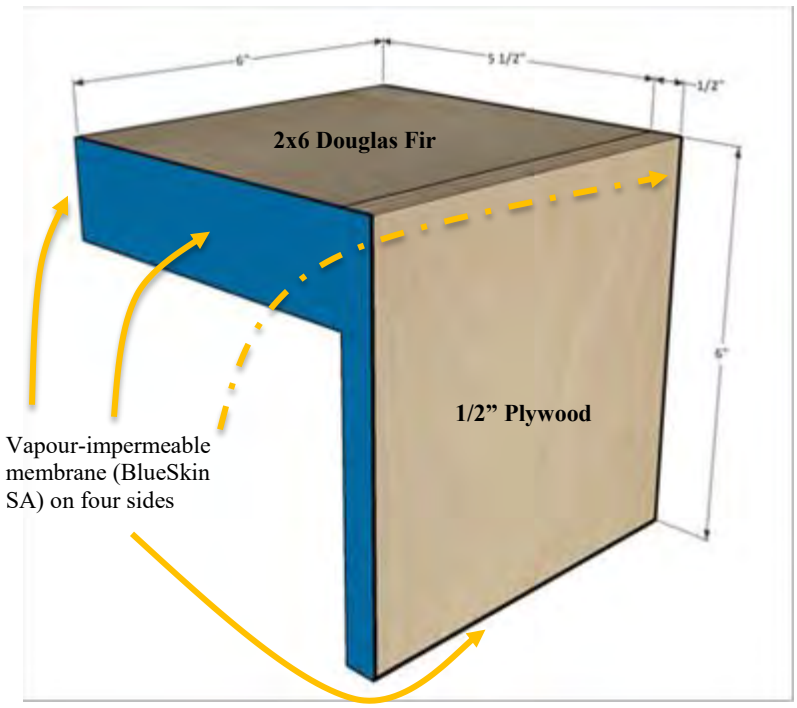

Figure 11: Wetted window sill sample before application of the liquid-applied flashing membrane to the outer face of the sill plate/plywood and plywood top edge. The underside of window sill sample remains untreated.

Moisture content sensors (moisture pins) were installed at differing depths, 6.4mm (¼") and 12.7 mm (½") from the surface, in the dimensional lumber and plywood sheathing of the window sill samples as illustrated in Figure 12. Prior to installing the respective flashing membranes, the specimens were submerged in water to rapidly increase their moisture content for 2 weeks after which they were placed in a conditioned chamber at 100% relative humidity for 3 weeks to allow the specimen moisture content levels to reach equilibrium conditions. Once this pretreatment was completed, liquid-applied membrane flashings were installed on the damp/wetted wood. Four samples were prepared for each membrane system. The drying rates of the samples were monitored under outdoor conditions (average temperature of 5°C and 84% RH) in Vancouver during January, February, and March of 2017. Note that the test specimens were placed under a roof to minimize exposure to direct solar radiation and rain (

Figure 13).

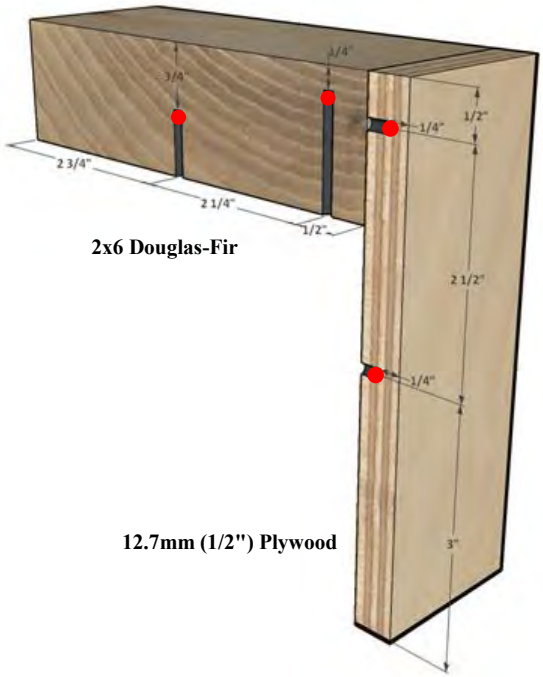

Figure 12: Cross-sectional illustration of window sill sample (Red dots indicate where moisture measurements were taken).

Figure 13: Photo taken from untreated underside of the samples. Note that samples were placed under a hut to ensure no direct exposure to solar radiation and rain.

Results and Discussion

Figure 14 and Figure 15 provide moisture content measurements of 2x6 dimensional lumber and plywood during the 8-week evaluation period. The results indicate that none of the samples dried satisfactorily when exposed to low-temperature, high-humidity conditions. At the end of 8-week monitoring period, the moisture content of all flashing systems except the vapor-permeable SAM were similar.

Figure 14: Moisture content of initially wetted 2x6 Douglas-Fir wood sill during 8-week monitoring period in outdoor drying environment (average temperature of 5°C and 84% RH)

Figure 14: Moisture content of initially wetted 2x6 Douglas-Fir wood sill during 8-week monitoring period in outdoor drying environment (average temperature of 5°C and 84% RH)

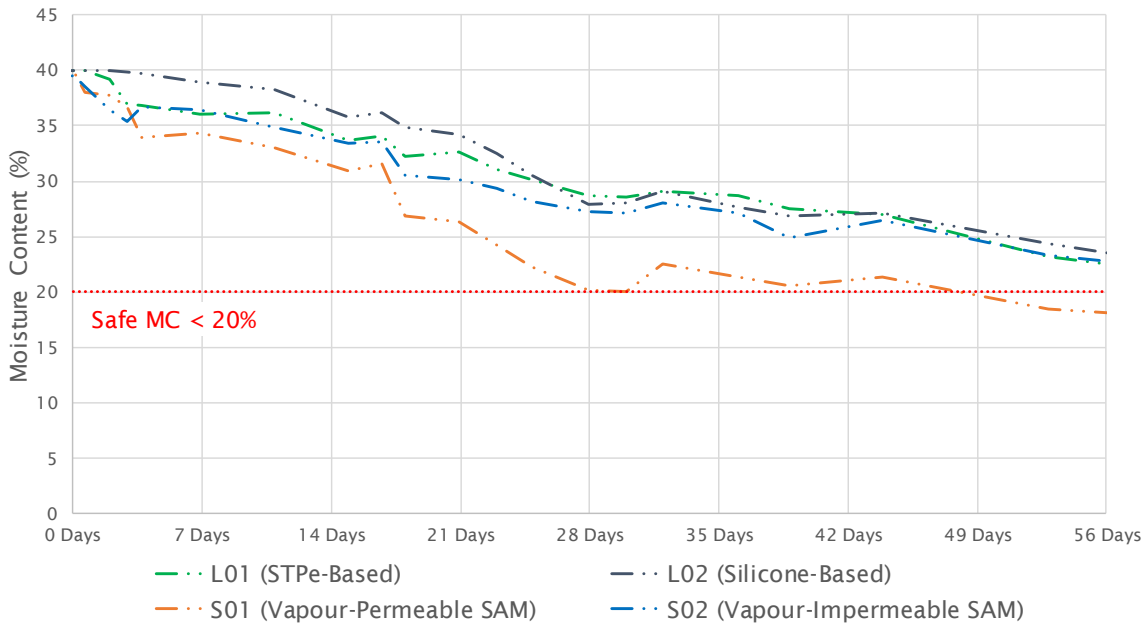

Figure 15: Moisture content of initially wetted 12.7mm (½") plywood sheathing during 8-week monitoring period in outdoor drying environment (average temperature of 5°C and 84% RH)

The results of this testing provide several useful insights into the drying characteristics of horizontally applied liquid membrane flashings. The results demonstrated the following findings:

1) *Vapour-permeable self-adhered membranes exhibit enhanced drying* – the window sill sample with a vapour-permeable self-adhered membrane flashing was able to dry sufficiently over the course of the experiment (below 20% MC). Remarkably, the two liquid-applied membranes and vapour-impermeable membrane possessed similar drying characteristics with no material difference in drying ability.

2) *Effect of exterior drying provisions* - the test specimens were designed to replicate outdoor drying conditions typically present at the sill of window rough openings during construction where drying can occur through the wood on the interior side (e.g. not through the membrane), as well as through the membrane on the exterior (if vapor-permeable). As inward drying was never constrained during this evaluation, sill flashing permeability appeared to have a limited impact on drying performance.

Crack-Bridging Ability

One challenge with liquid-applied membranes is related to their ability to bridge substrate gaps present during initial application of the membrane (static gap application) and in-service when under stress (dynamic gap movement). On construction sites the sill flashing material must bridge gaps/joints found between the steel stud/wood framing and the sheathing material (gypsum, plywood, OSB). Figure 16 shows

a typical window rough opening sill with a gap between the sheathing and sill plate. Gaps may also form and subside as dimensional changed occur in the substrate due to wetting and drying of wood products and thermal expansion and contraction of adjoining materials. For example, the plywood/OSB sheathing at a window rough opening may swell when wetted and shrink when drying leading to gaps forming and retreating: the sill flashing must adequately manage this dynamic movement or it may fail.

Figure 16: Typical gap found between the sheathing and sill framing at wood-framed window rough opening

Static Gap

Procedure

To examine the static crack-bridging capability of liquid-applied flashings, seven liquid membrane products of various chemistries (STPe-, silicone-, acrylic-based) were applied per the manufacturer's instructions over substrate gap widths of 1.6mm (1/16"), 3.2mm (1/8"), and 6.4mm (¼") (Figure 17). A wet mil gauge was used to ensure that the required application thicknesses (from manufacturer's literature) were consistent across the specimens. Observations were recorded immediately after application, at 24 hours, and at 48 hours with visible deficiencies (holes, rips, other defects) logged as membrane failures. Note that a liquid-applied membrane could be visibly sagging and still satisfactorily bridge the gap (Figure 18). This application of liquid-applied membrane to substrates without pre- or post-treatment or sealing of various gaps and joints was evaluated during this test.

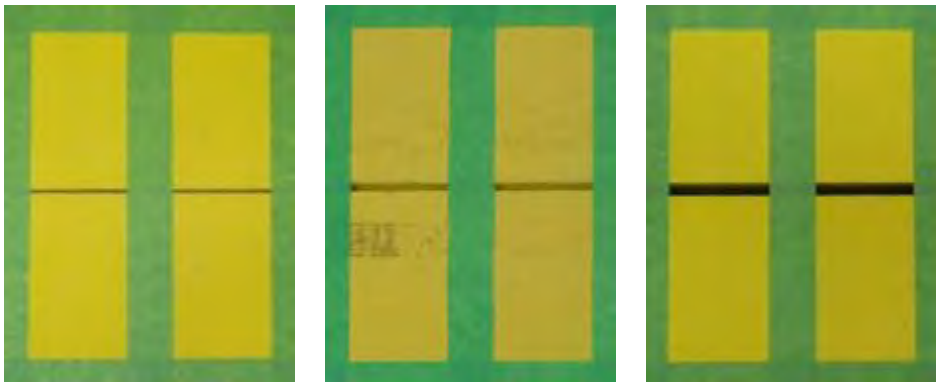

Figure 17: Typical 1.6mm (1/16"), 3.2mm (1/8"), and 6.4mm (¼") gap found between the sheathing and sill framing at wood-framed window rough opening

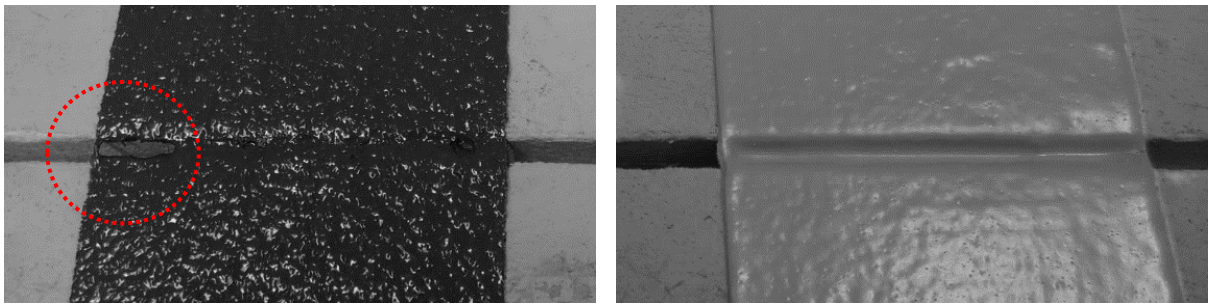

Figure 18: Example of membrane failure (on the left) and satisfactory crack-bridging (on the right) across a 3.2mm (1/8") gap

The tested liquid-applied membranes were assessed on a pass or fail basis 48 hours after application.

Results and Discussion

The results indicate whether the liquid membrane samples successfully bridged the various joint sizes or failed, respectively (Table 4). Note that specimen L07 successfully bridged a 3.2mm (1/8") gap, but failed to bridge the 1.6mm (1/16") and 6.4mm (¼") gaps.

Table 4: Liquid Membrane Flashing Static Gap Bridging Ability

Sample ID	Chemistry	Thickness (wet mils)	1.6mm (1/16") Gap	3.2mm (1/8") Gap	6.4mm (¼") Gap
L01	STPe	15 mils	FAIL	FAIL	FAIL
L02	STPe	15 mils	FAIL	FAIL	FAIL
L03	Silicone	30 mils	FAIL	FAIL	FAIL
L04	STPe	25 mils	BRIDGED	BRIDGED	FAIL
L05	Silicone	65 mils	BRIDGED	BRIDGED	BRIDGED
L06	STPe	15 mils	BRIDGED	FAIL	FAIL
L07	Acrylic	48 mils	FAIL	BRIDGED	FAIL

Dynamic Gap

Procedure

To evaluate the performance of liquid-applied flashings installed across dynamic gaps, the same seven liquid membrane products of were applied (at the same application thicknesses as the static gap test) across two pieces of butting gypsum sheathing and attached to a dynamic gap apparatus (Figure 19). The dynamic gap apparatus allowed the membrane to cycle between spanning a closed gap to gaps widths of 1.6mm (1/16”), 3.2mm (1/8”), 6.4mm (¼”), and 12.7mm (½"), respectively. Note that the gypsum sheathing was reviewed and measured from the backside to ensure that the intended gap widths were met.

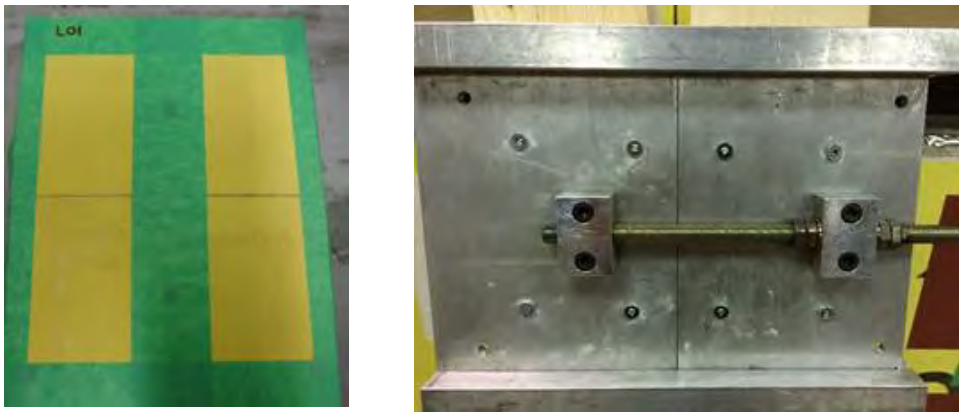

Figure 19: Gypsum sheathing with no gap before membrane application (on the left) and dynamic gap apparatus attached to the backside of sheathing (on the right)

After 1 week of membrane cure time, the apparatus was opened first to 1.6mm (1/16”), then to 3.2mm (1/8”), 6.4mm (¼”), and 12.7mm (½”). The apparatus was returned to the initial position (zero gap) after each gap width prior to progressing to the next width. The apparatus was opened and closed at a rate 19mm (¾”) per a minute. Once the target gap position was met it was held for 30 minutes before adjustment at which point the tested membranes were assessed on a pass or fail basis.

RESULTS AND DISCUSSION

The results indicate which specimens successfully bridged the various gap sizes and at what point they failed (Table 5). Note that only two membranes successfully overcame the 6.4mm (¼”) gap (Figure 20). Liquid-applied membranes comprising STPe- and acrylic-based chemistries tended to exhibit plastic behavior when exposed to dynamic movement whereas silicone-based liquid-applied membrane were observed to be fairly elastic.

Table 5: Membrane Flashing Dynamic Gap Bridging Ability

Sample ID	Widen Gap 1.6mm (1/16”)	Close Gap 0mm (0”)	Widen Gap 3.2mm (1/8”)	Close Gap 0mm (0”)	Open Gap 6.4mm (¼”)	Close Gap 0mm (0”)	Open Gap 12.7mm (½”)
L01	FAIL	FAIL	FAIL	FAIL	FAIL	FAIL	FAIL
L02	BRIDGED	BRIDGED	FAIL	FAIL	FAIL	FAIL	FAIL

L03	BRIDGED	BRIDGED	FAIL	FAIL	FAIL	FAIL	FAIL
L04	BRIDGED	BRIDGED	FAIL	FAIL	FAIL	FAIL	FAIL
L05	BRIDGED	BRIDGED	BRIDGED	BRIDGED	BRIDGED	BRIDGED	BRIDGED
L06	FAIL	FAIL	FAIL	FAIL	FAIL	FAIL	FAIL
L07	BRIDGED	BRIDGED	BRIDGED	BRIDGED	BRIDGED	FAIL	FAIL

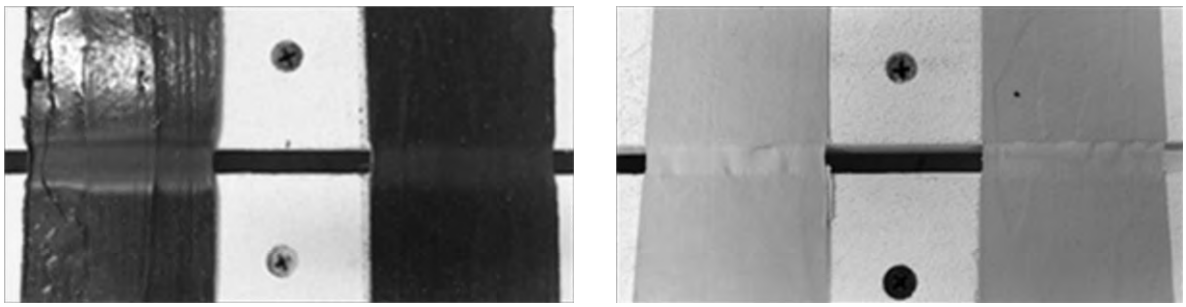

Figure 20: Membrane L05 and Membrane L07 successfully bridging the 6.4 mm (¼") gap

The observations from the static and dynamic crack-bridging evaluation offer the following conclusions:

1) *Membrane application thickness matters* – membrane application thickness rather than chemistry appears to be the primary driver behind spanning static and dynamic gaps. Both an STPe- and silicone-based membrane (L04, L05) were capable of bridging 3.2mm (1/8") substrate gaps during static gap testing as they possessed higher application thicknesses than other membranes with similar chemistries. Similarly, thicker applied silicone- and water-based acrylic membranes (L05, L07) were able to span 6.4mm (¼") joints during dynamic gap testing where membranes with lower application thicknesses failed.
2) *Joint treatment is recommended for all substrate gaps* – while some of the tested liquid-applied membranes demonstrated some ability to bridge static and dynamic gaps, joint treatment (thicker sealant, reinforcing, or membrane strip) is recommended for all liquid membrane flashings. Even products with some ability to bridge static and dynamic gaps will have difficulty overcoming in-service cyclic movement.

CONCLUSION AND RECOMMENDATIONS

The utility of liquid-applied flashing membranes in horizontal applications remains poorly understood in the industry. The existing standards and guidelines pertaining to membrane flashings do not adequately capture the real-world challenges that these materials face on typical construction sites. As such, three test procedures were completed to evaluate the performance of liquid-applied flashing membranes at the sill of wood-framed rough openings. This included: monitoring the moisture content of wood framing components below horizontal flashing applications with ponded water; monitoring the moisture content of initially wetted wood framing after flashing membrane application; and, static and dynamic gap bridging tests.

The results of this testing indicate that several variables can substantially affect the performance of liquid-membrane flashings when applied in horizontal applications. Membrane chemistry and the associated vapour permeability of the material appear to have an impact on the long-term water repellency of the sill flashing. Flashing membranes with lower vapour permeance tend to manage water ponding adequately at least over smaller timescales. The drying potential of the tested liquid membranes did not seem to provide any substantial benefit over industry standard peel-and-stick membranes (vapour-impermeable). Membrane application thickness seems to be an important driver in bridging the gaps and cracks typically found at window rough openings with thicker applications being able to span larger gaps. However, it is recommended that all cracks and gaps present in the substrate be treated/filled prior to installing the liquid-applied membrane (regardless of application thickness) so as to ensure that the membrane will remain continuous across static gaps and when exposed to substrate/building movement. It should be noted that none of the tested products exhibited gap bridging performance comparable to industry standard impermeable self-adhered membranes.

Beyond these initial recommendations, the long-term goal of this research is to help inform the wider industry on useful test standards, guidelines, and specifications for evaluating vapor-permeable liquid-applied flashing membranes in an expanded range of applications, including horizontal windowsills. Further research and testing, including the development of appropriate standardized ASTM or AAMA test methods, is still required before wider acceptable of vapour-permeable liquid-applied flashings can be achieved. The intent of this research is to initiate the creation of the new test standards/guidelines that adequately reflect the in situ performance of liquid membrane flashing materials.

REFERENCES

AAMA (2013). AAMA Specification 711, Voluntary Specification for Self Adhering Flashing Used for Installation of Exterior Wall Fenestration Products. Schaumburg: American Architectural Manufacturers Association, AAMA 711-13.

AAMA (2013). AAMA Specification 714, Voluntary Specification for Liquid Applied Flashing Used to Create a Water-Resistive Seal Around Exterior Wall Openings in Buildings. Schaumburg: American Architectural Manufacturers Association, AAMA 714-15.

AATCC (2008). AATCC Test Method 127, Water Resistance: Hydrostatic Pressure Test. Durham: American Association of Textile Chemists and Colorists, AATCC 127-08.

ASTM (2016). ASTM Standard E96, Standard Test Methods for Water Vapor Transmission of Materials. Philadelphia: American Society for Testing and Materials, ASTM E96M-16