15th Canadian Conference on Building Science and Technology

November 6-8, 2017

Vancouver, BC, Canada

MORRISON HERSHFIELD

A Case History Review of ETFE on Today's Current Projects

J. Lee Durston, Principal

Abstract

ETFE, the fluorocarbon-based polymer ethylene tetrafluoroethylene, is quickly gaining popularity in North America with it's use on some of the continent's most prominent projects. ETFE was developed for architectural purposes in the 1970s, and since that time, mainstream use of ETFE in construction projects has been largely limited to Europe. The material has many attractive attributes that provide not only a new aesthetic quality, but also potential cost savings. Weighing in at roughly one percent of the weight of glass, significant reductions in structural costs are made possible by employing ETFE. Despite these great potential benefits, the material is not an equal substitution to glass or other roofing systems in many respects. Through review of material characteristics, performance modeling, and multiple case studies of current ETFE installations, the authors will discuss lessons learned, limitations, as well as the benefits of the material from the perspective of building science implications.

Learning Objectives

- Understand the basic anatomy of an ETFE system.
- Understand the hygro-thermal performance and condensation resistance of an ETFE system.
- Understand the major questions to ask when including an ETFE system in design of a new project.
- Understand the major milestones of the design/construction review of an ETFE system.

What is ETFE?

What is ETFE?

- ethylene tetrafluoroethylene
- Family of Tensile Membranes
  - PTFE Teflon®-coated woven fiberglass membrane
  - PVC –woven or non-woven membrane
  - ePTFE –coated woven material
  - Insulated Tension Membrane – aerogels in layer
  - ETFE -a foil or sheet of plastic

ETFE Foil

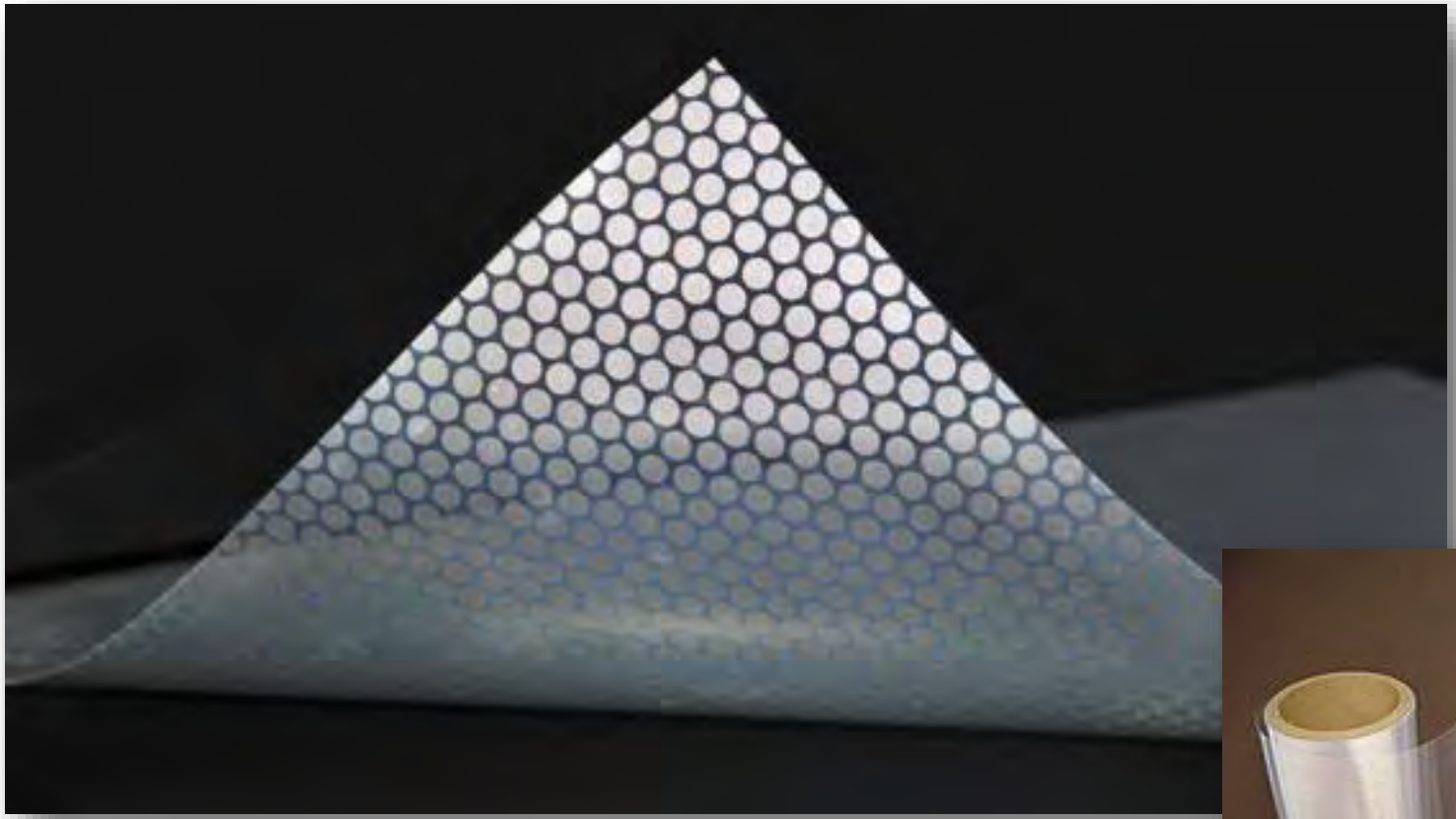

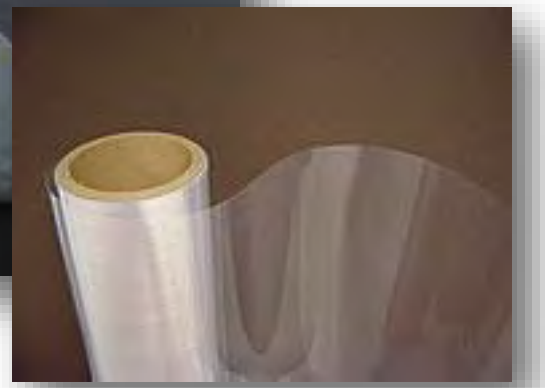

What It Can Become

A Brief History

- Originally developed by DuPont
- Used as wire insulation
- Greenhouses
- Explored as a new nautical sail material

- *Vector Foiltec and BirdAir emerge as leaders*

Separation Barriers- HAMM

- H Heat Barrier
- A Air Barrier
- ML Water Barrier (Liquid Moisture)
- MV Vapor Barrier (Gaseous Moisture)

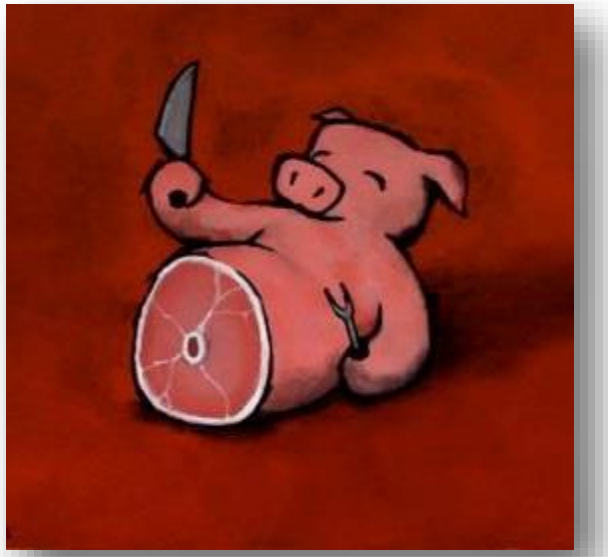

The Constant Dilemma

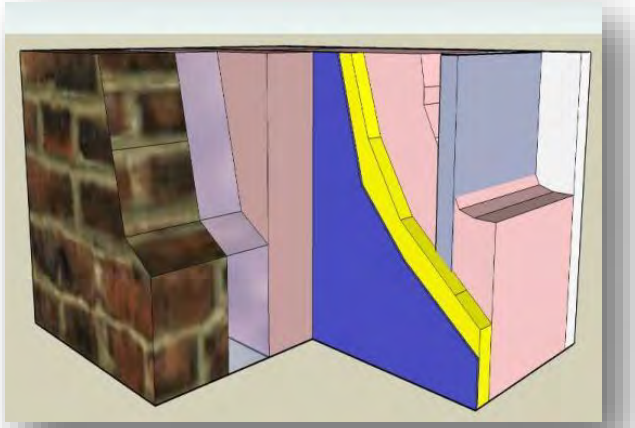

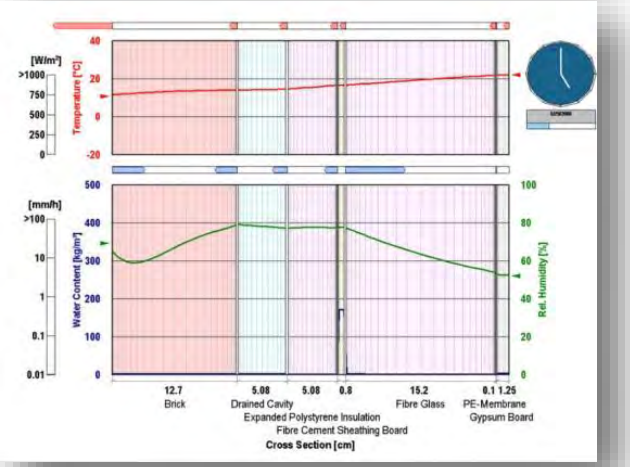

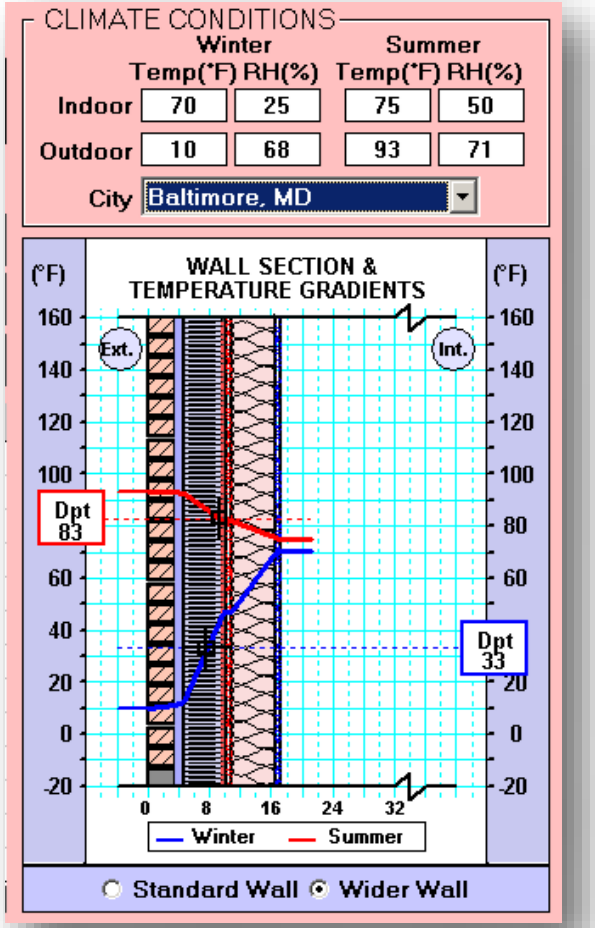

Fenestration

Fenestration as Roofing

Glazed Assemblies

Translucent Panels

ETFE

Light Transmission

ETFE- Single Layer

ETFE – Cushion (3 foil)

Typical Rail /Cushion

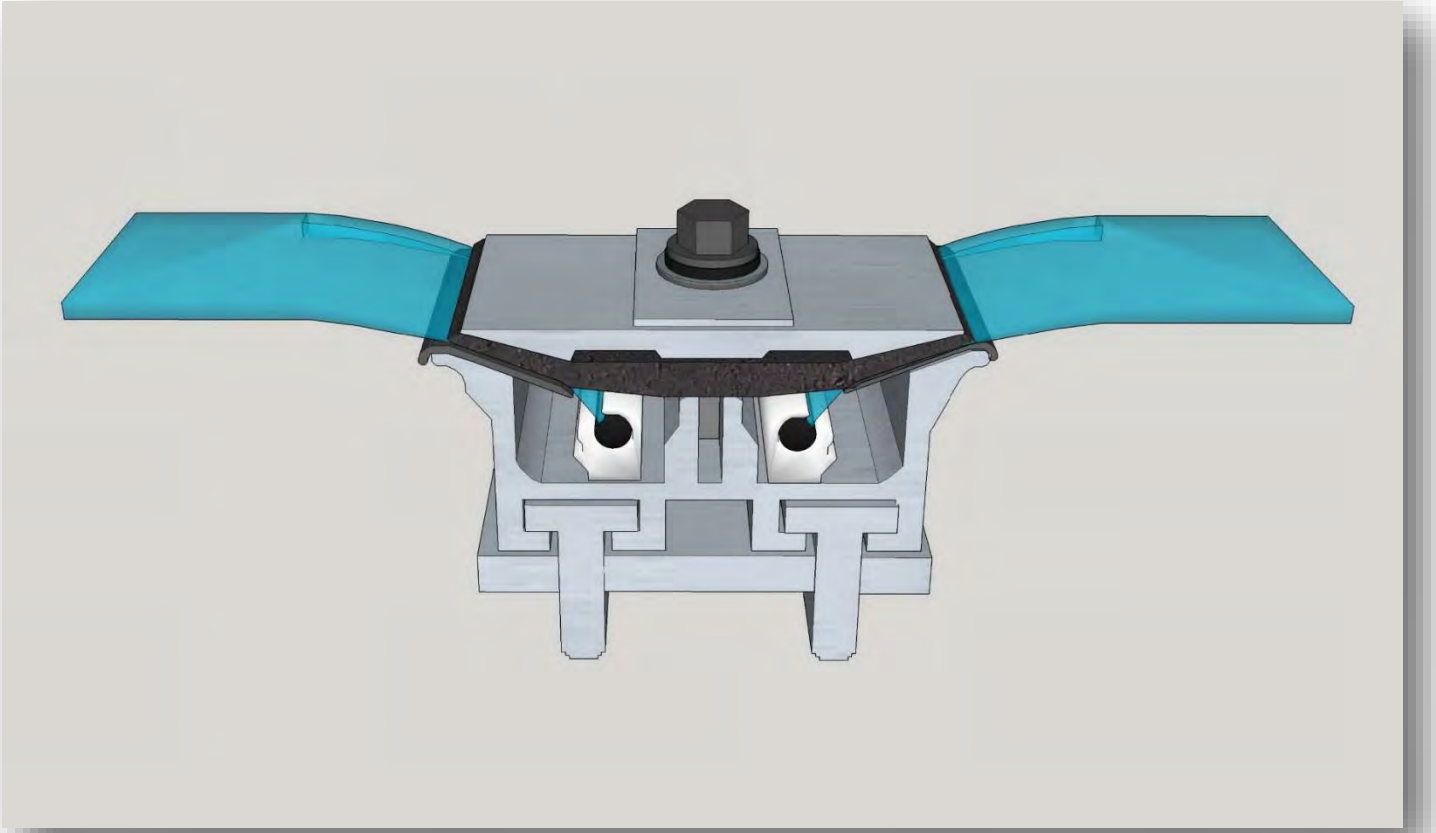

Pressurization Units

Frit Pattern

Weight

Glazing vs ETFE

Fire

· ASTM E84, Standard Test Method for Surface Burning Characteristics of Building Materials, Class A;
· UL 94VTM, Tests for Flammability of Plastic Materials for Parts in Devices and Appliances−Thin Material Burning Test, Class 0;
· EN 13501-1, Fire Classification of Construction Products and Building Elements−Part 1: Classification Using Data From Reaction to Fire Tests, Class B-s1-d0; and
· National Fire Protection Association (NFPA) 701, Standard Methods of Fire Tests for Flame Propagation of Textiles and Films.

Acoustics and Security

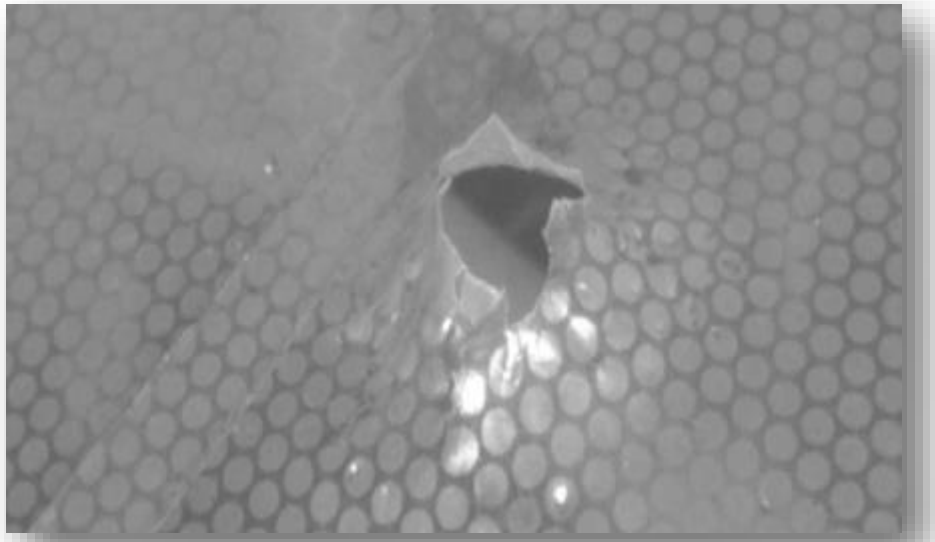

Integrating ETFE for Your Project

- HAMM
- Wind
- Rain
- Snow
- Project Specific Detailing
- Holistic Consulting Process

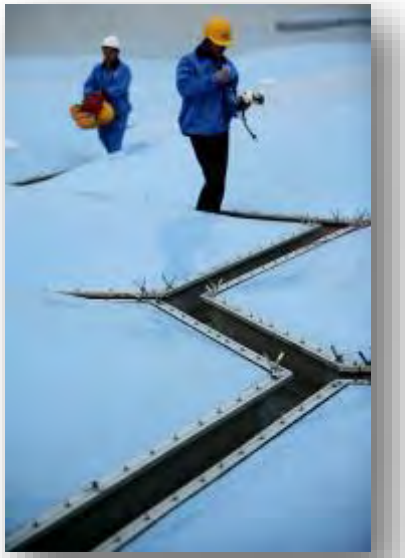

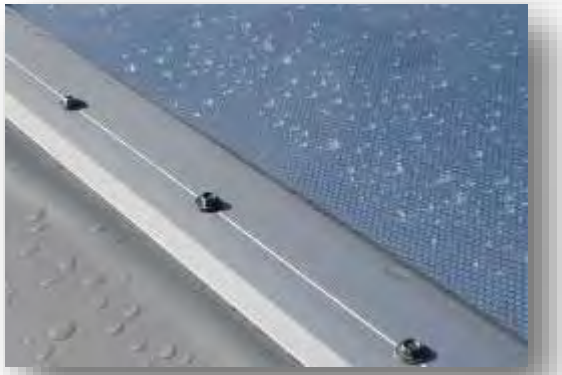

Heat

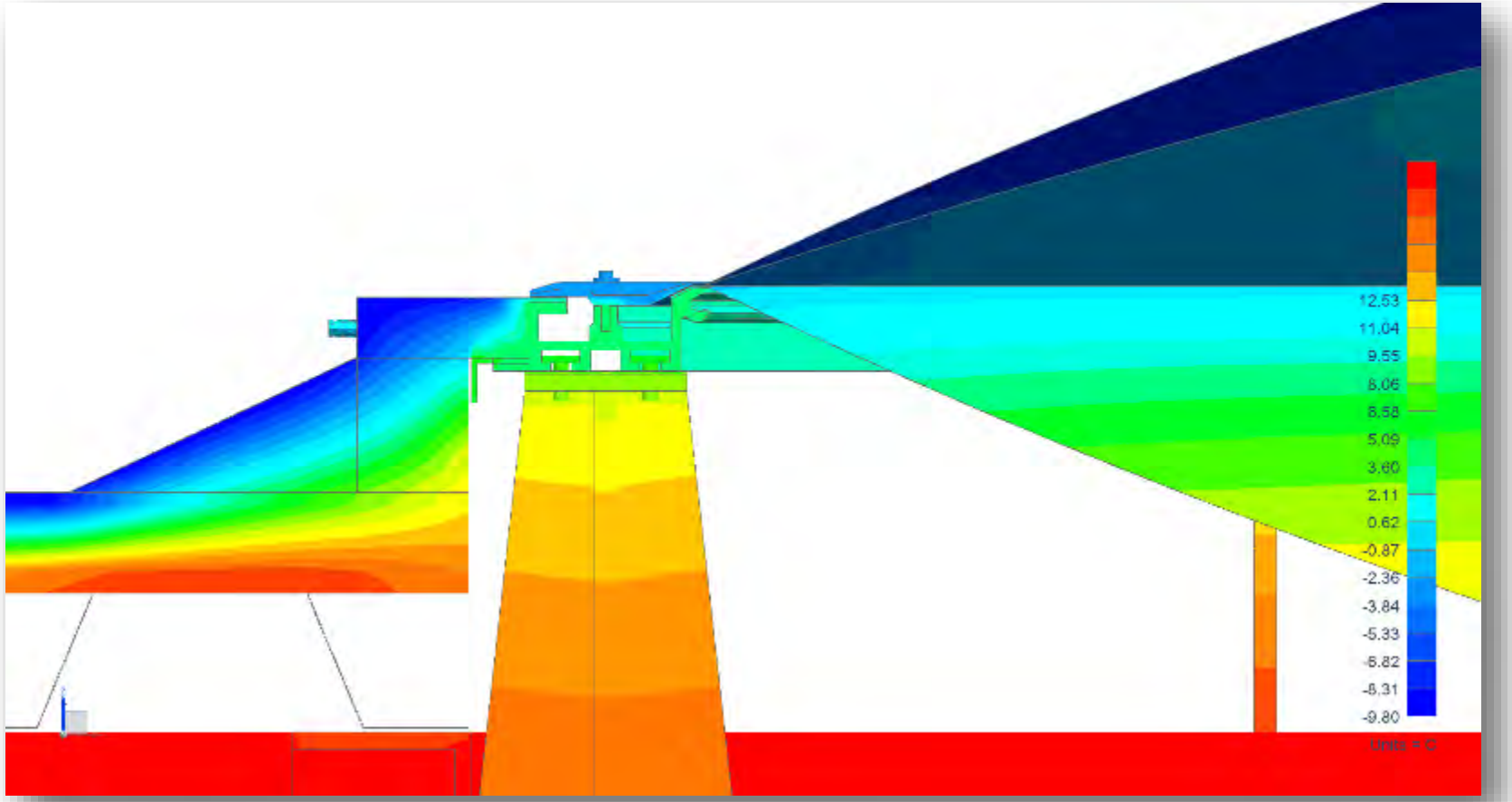
12.53
11.04
9.55
8.06
6.58
5.09
3.60
2.11
0.62
-0.87
-2.36
-3.84
-5.33
-6.82
-8.31
-9.80
Units = C

Heat

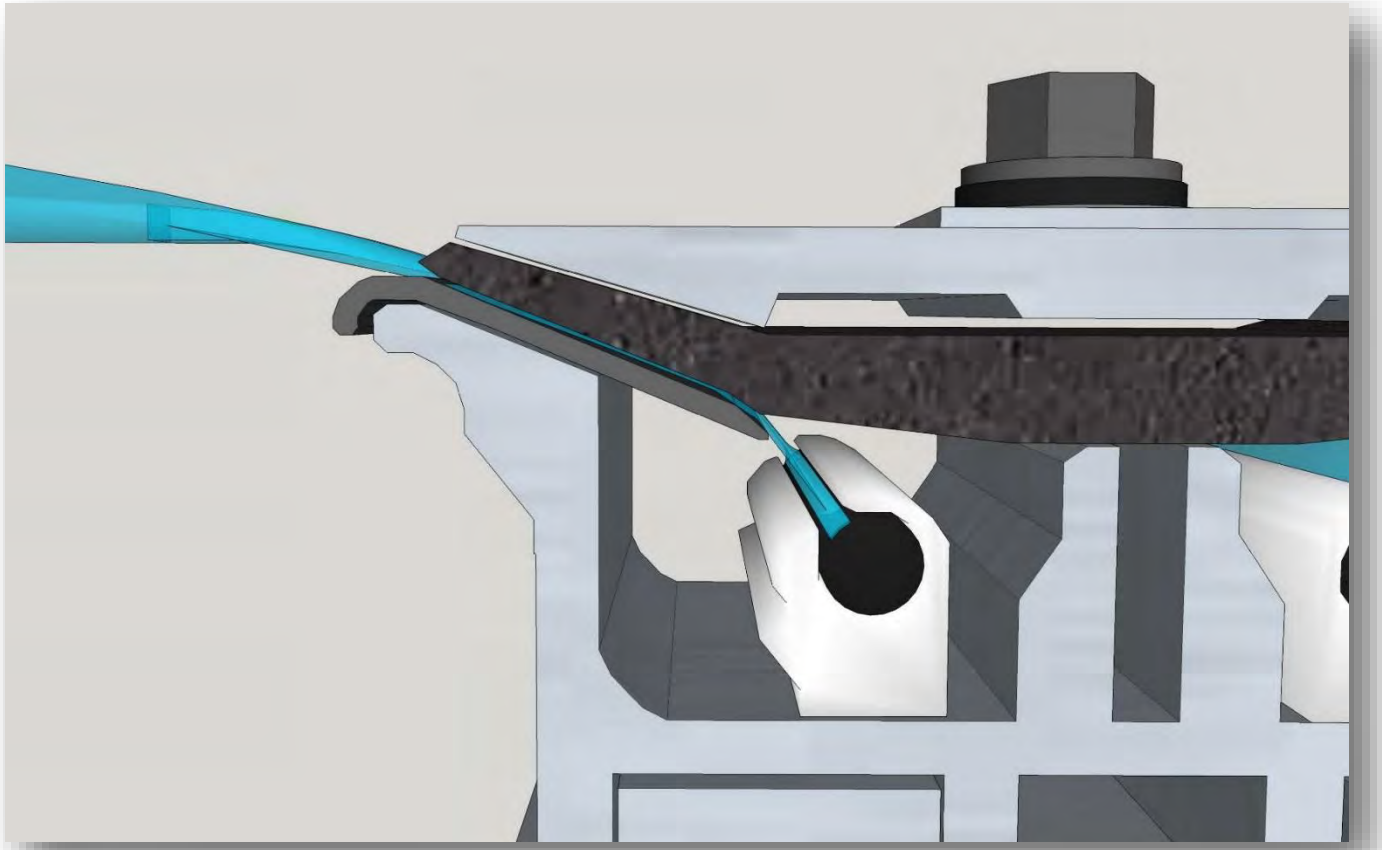

Condensation

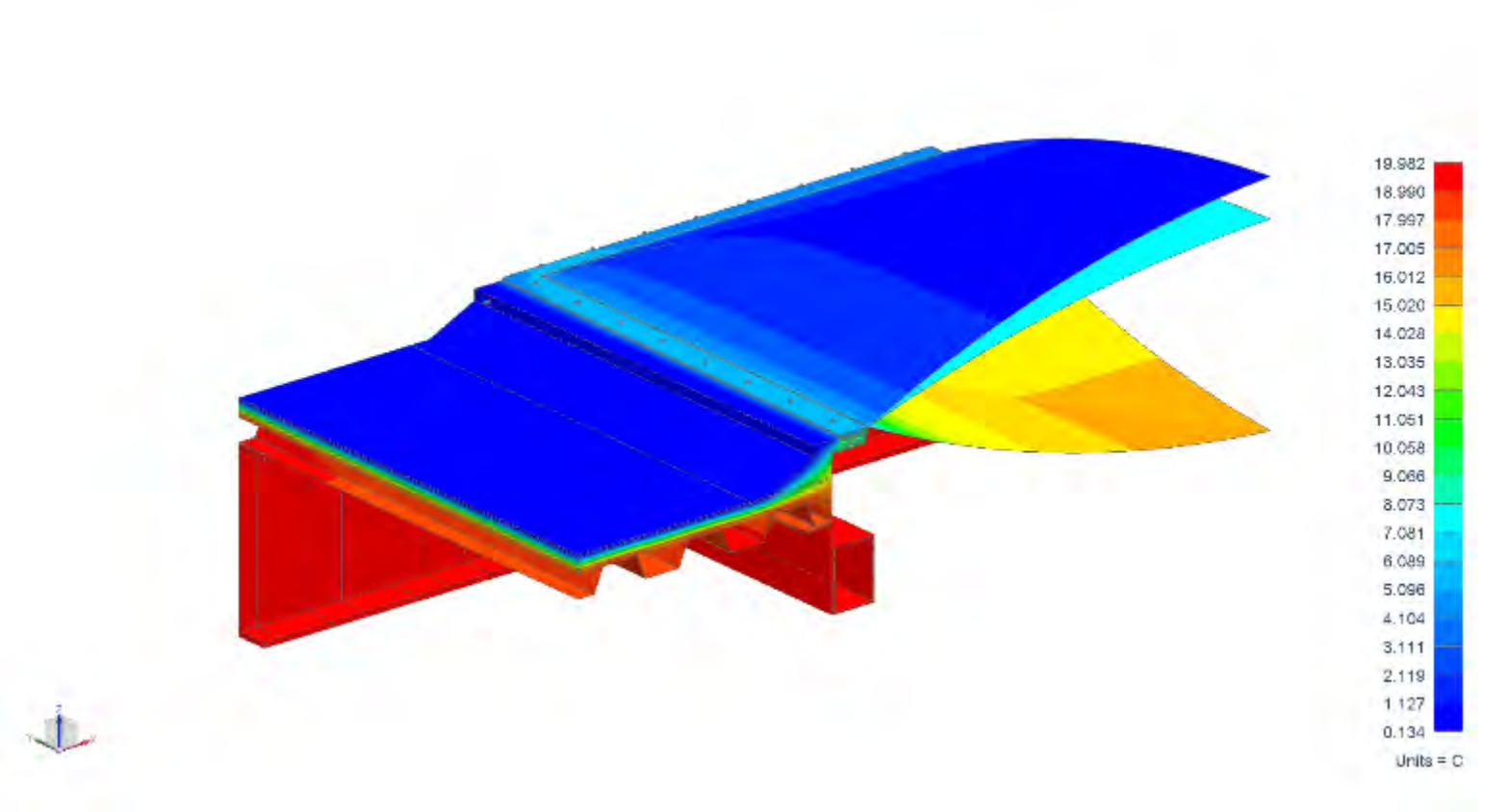

3D Thermal Modelling

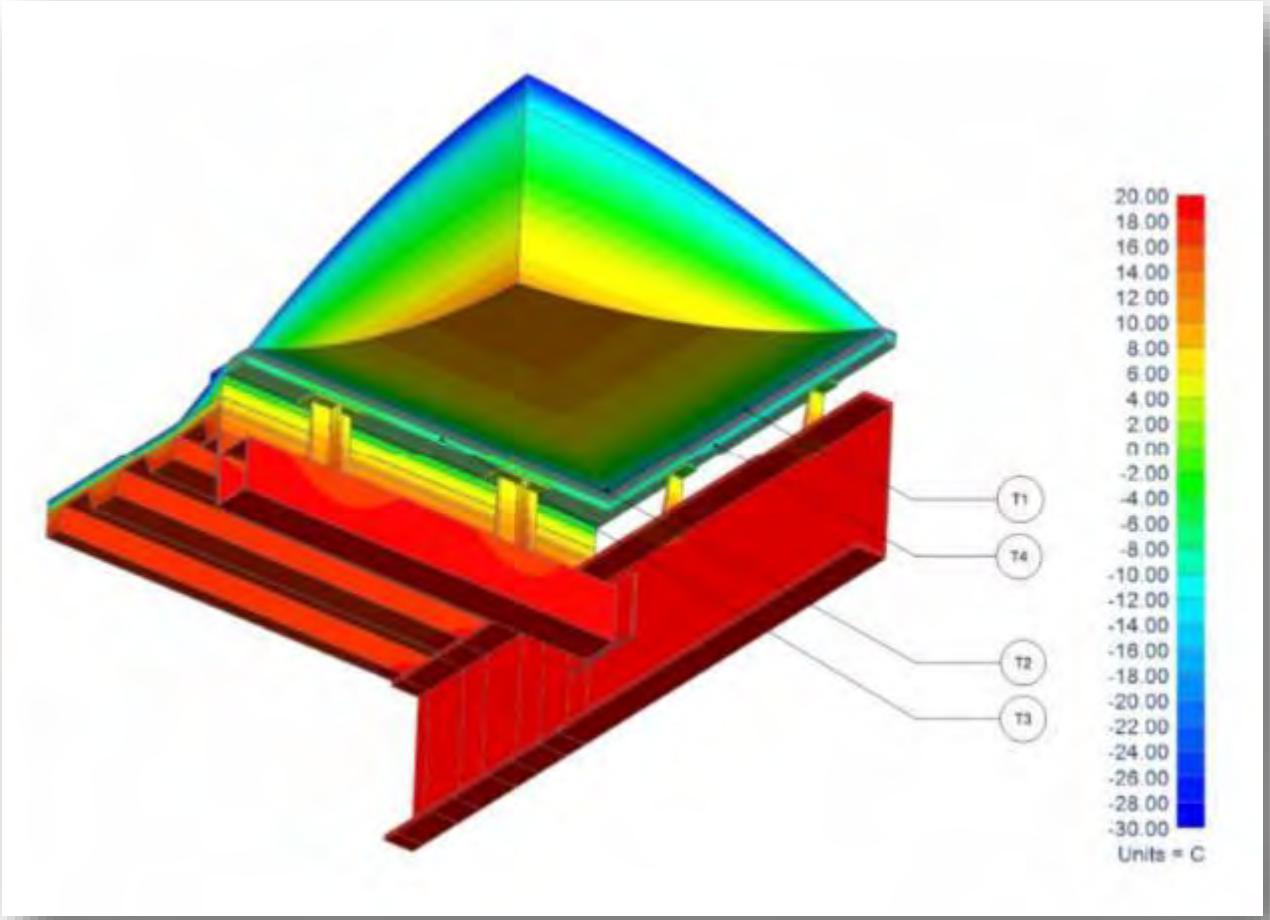

Exterior Temp (°F) (Celsius)	Location							
	T1 – Bottom ETFE Sheet Edges		T2 – Bottom ETFE Sheet Corner		T3 - Extrusion frame by SBS		T4 – Extrusion frame perp to SBS	
	Surface Temp (°F)	Max Allowable RH %	Surface Temp (°F)	Max Allowable RH %	Surface Temp (°F)	Max Allowable RH %	Surface Temp (°F)	Max Allowable RH %
32 (0)	44.4	**43%**	44.1	**42%**	48.9	**50%**	45.3	**44%**
14 (-10)	32.4	**27%**	32.0	**26%**	39.4	**35%**	33.8	**28%**
-0.4 (-18)	23.4	**17%**	22.5	**17%**	31.6	**26%**	24.8	**19%**
-22 (-30)	8.6	**8%**	7.7	**8%**	20.3	**15%**	11.3	**10%**

Snow Loading

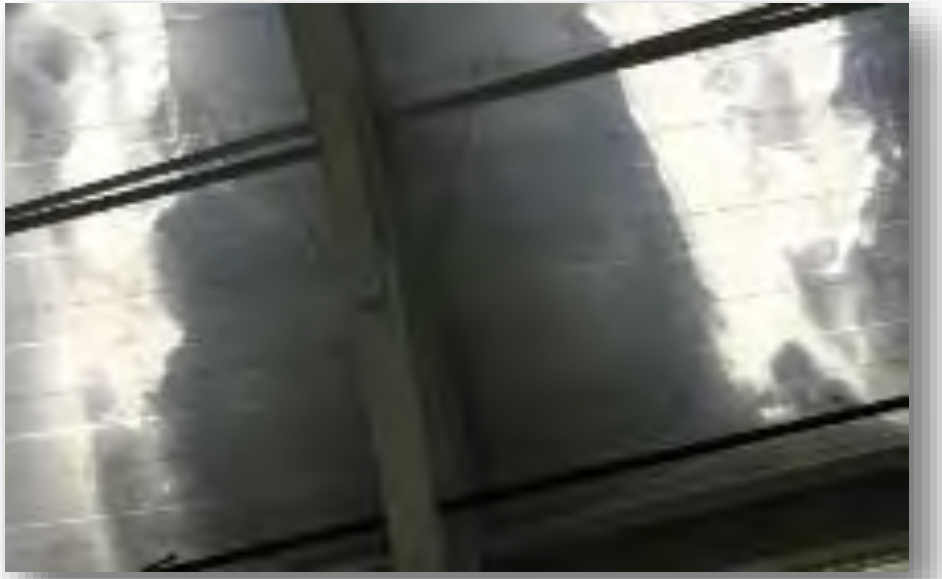

Snow Management

Consulting QA/QC Process

- Design Phase
  - Wind, Snow, Rain Management
  - Structural
- Pre-Construction Phase
  - Shop Drawings
  - Mock Ups
  - Performance Testing

Holistic QA/QC Process

- Construction Phase
  - Site Visits for Construction Observation
  - Performance Verification

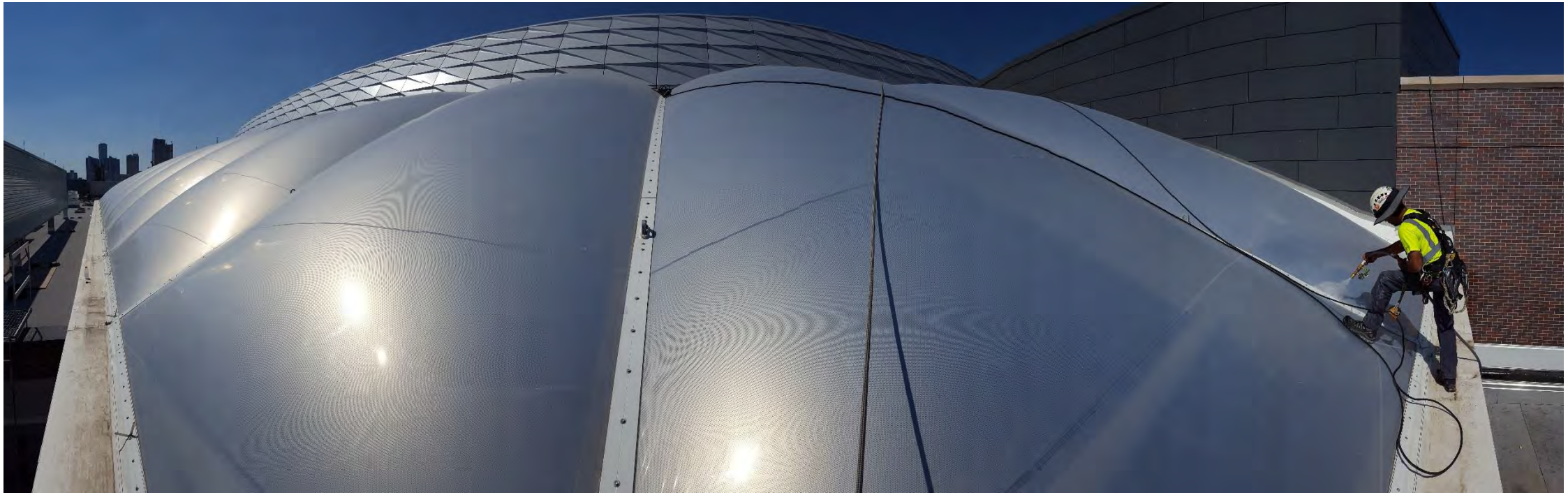

Operations

- Warranty
- Maintenance
- Repair

New Challenges….

Case Studies

- **Benefits of an ETFE System**

  - Lightweight
  - Light Transmittance
  - Flexibility in Design and Movement
  - Architectural Appeal

Forsyth Barr Stadium

Mercedes Benz Stadium

Mercedes Benz Stadium

Mercedes Benz Stadium

Mercedes Benz Stadium

Little Caesars Arena

Little Caesars Arena

Little Caesars Arena

Little Caesars Arena

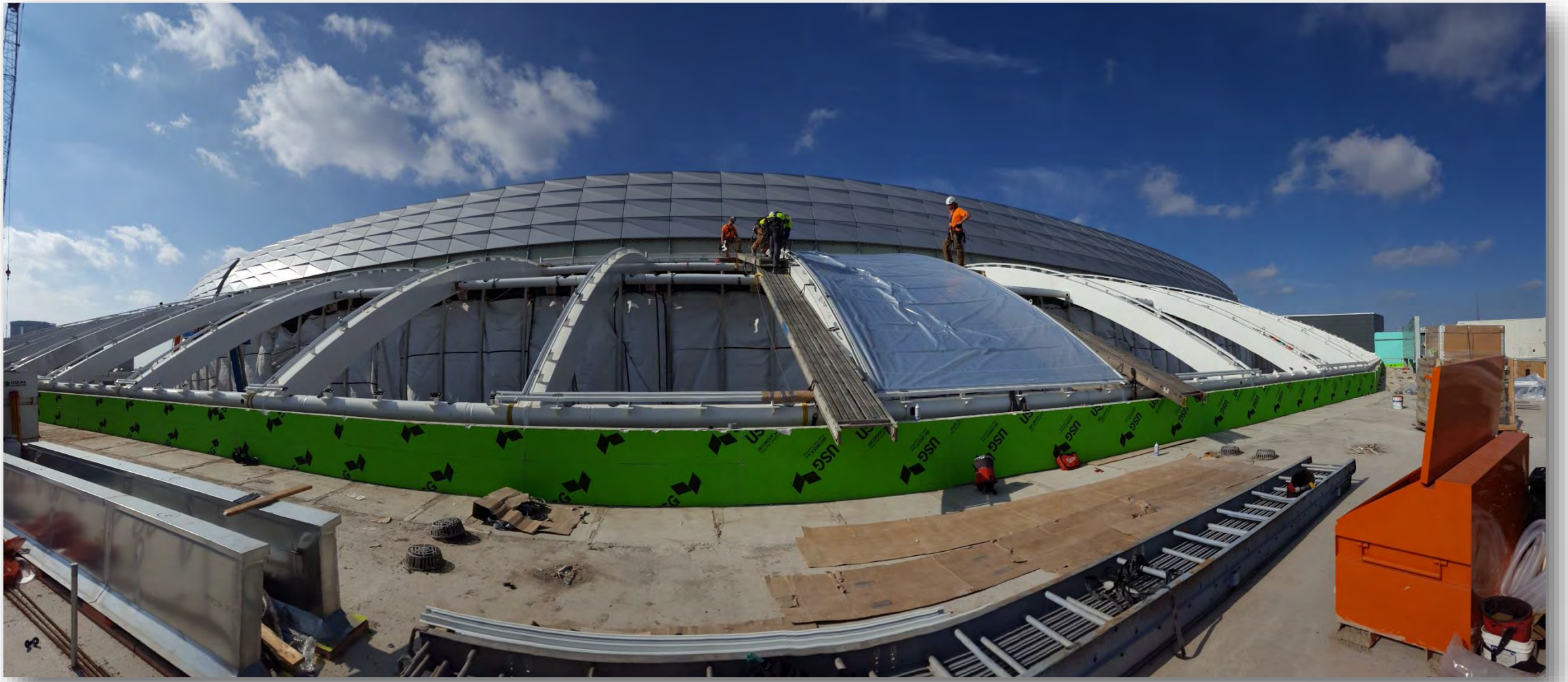

Little Caesars Arena

Little Caesars Arena

US Bank Stadium

US Bank Stadium

US Bank Stadium

US Bank Stadium

US Bank Stadium

US Bank Stadium

US Bank Stadium

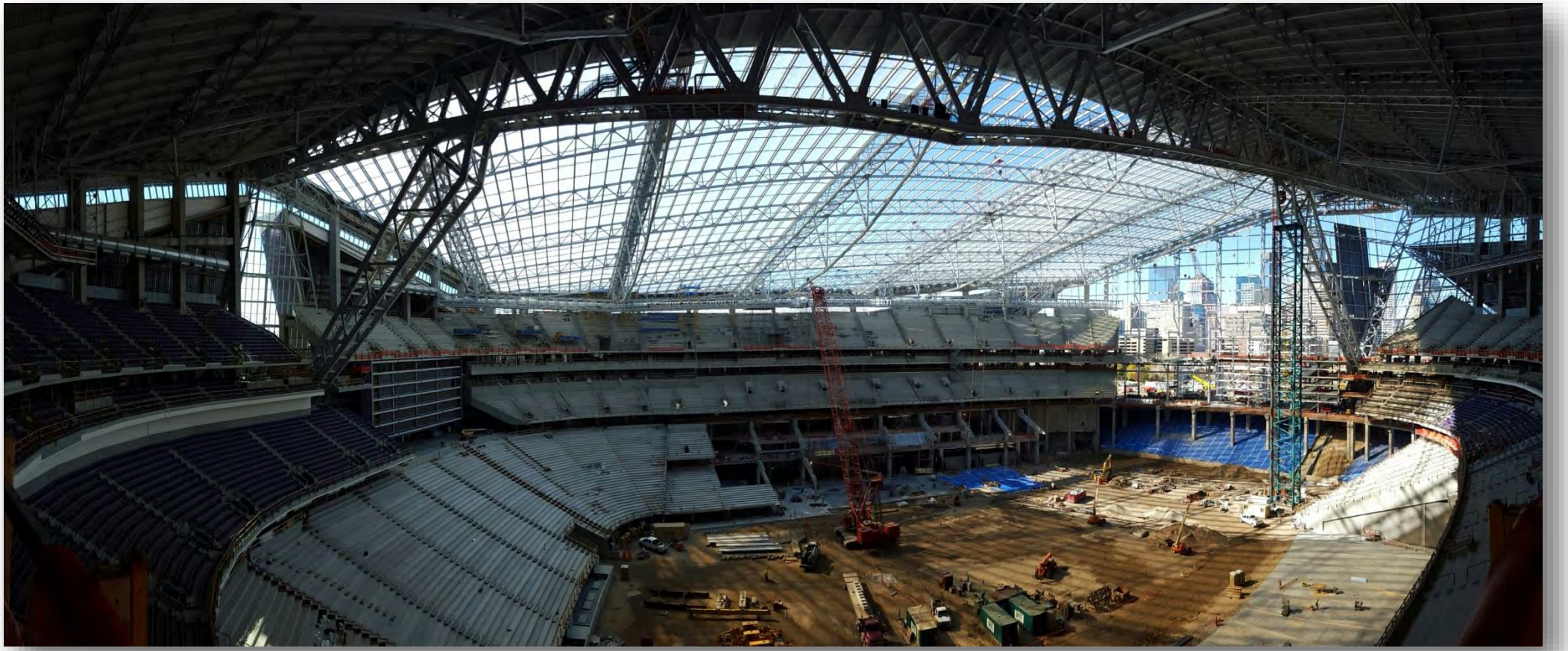

US Bank Stadium

US Bank Stadium

US Bank Stadium

Discussion

Morrison Hershfield