A CASE HISTORY REVIEW OF ETFE ON TODAY'S CURRENT PROJECTS

J. Lee Durston, Morrison Hershfield

ABSTRACT

ETFE, the fluorocarbon-based polymer ethylene tetrafluoroethylene, is quickly gaining popularity in North America with its use on some of the continent's most prominent projects. ETFE was developed for architectural purposes in the 1970s, and since that time, mainstream use of ETFE in construction projects has been largely limited to Europe. The material has many attractive attributes that provide not only a new aesthetic quality, but also potential cost savings. Weighing in at roughly one percent of the weight of glass, significant reductions in structural costs are made possible by employing ETFE. Despite these great potential benefits, the material is not an equal substitution to glass or other roofing systems in many respects. Through review of material characteristics, performance modeling, and multiple case studies of current ETFE installations, the authors will discuss lessons learned, limitations, as well as the benefits of the material from the perspective of building science implications.

INTRODUCTION - ETFE HISTORY

In the late 1940's, DuPont developed ETFE and worked to define an appropriate end use for the material. Not surprisingly, architecture did not get the first look. One of the first explored applications was the insulating material for electrical wire, which needed to be resistant to friction and abrasion and immune to hostile environments such as radiation exposure and extreme temperatures. The product also found a specialized use in greenhouse applications and proved itself as a robust and stable material, resistant to tear and puncture as well as the negative effects of UV, while transmitting the needed spectrum of light for plant growth. In the 1980's Stephan Lehnert, a mechanical engineer by trade, first investigated the use of the material as a ship sail material. After determining the ETFE foil was not a betterment to the sail technology of the time, he explored its use as an architectural cladding and roofing material. Lehnert later founded Vector Foiltec in 1982, a design-build provider of ETFE systems world-wide. The first project with ETFE was a pavilion at a zoo located in Arnheim, Holland. ETFE is considered to be in the family of tensile fabrics used in tensioned fabric structures, or at least a distant relative. It is neither a coated fabric nor a mesh fabric like its tensile fabric cousins, but lends itself to many of the same design considerations. In the late 1950's, a New York man by the name of Walter Bird formed a company called Birdair, and began his pursuit of designing and constructing some of the world's most impressive tensioned fabric structures. As ETFE became a relevant material, it was quickly adapted into Birdair's wheelhouse and Birdair has continued to grow with subsidiaries around the world.

Today, Vector Foiltec and Birdair are considered two of the largest ETFE design-build specialty contractors

in the world, and with ETFE increasingly being specified on a wide range of projects from schools and offices, to government buildings and sports facilities, the number of other competitors is rapidly increasing. This increased competition has affected the manufacturing of the material, as well, and DuPont is no longer the only manufacturer of ETFE. The most well-known brand names of ETFE include Tefzel® by DuPont, Fluon® by Asahi Glass Company and Neoflon® ETFE by Daikin, among others.

Foils to Cushion

ETFE has changed considerably from its first use as an electrical insulator and takes on a much more eye catching form in architectural settings. To make the material useful architecturally, the ETFE is extruded into thin sheets, which are referred to as foils. The thickness of individual foils can vary, but are typically between 2 and 12 mils (0.002-.012 inches/ 0.05 – 0.3mm), depending on the performance requirements for given loading conditions. In multi-layered applications, individual foils are welded together along the perimeter and inflated to become a cushion. The most common applications in North America have included two and three foil cushions, but single layer installations do exist, as well as high performance systems with up to five foils. For a simplified comparison, the number of foils can be loosely compared to single, double, and triple-lite glazing units. In fact, ETFE systems are very similar in performance to glazed systems and are serving as an alternative option for these systems.

Insulation

Much like a glazed system, increased thermal performance is possible with a multi-layered approach. When foils are formed into cushions, the pressurized air serves to stabilize the film and provides structural performance in addition to the thermal performance of the system. In a single layered application, ETFE will achieve an approximate R-Value of less than 1. A two-layer system will reach approximately R-2.0, and a three- layer ETFE system will have an R-Value of approximately 2.9.

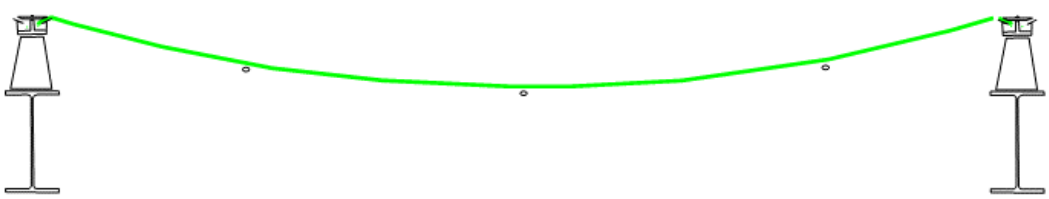

Figure 1: A sketch diagram of a 1 foil, cable-supported ETFE system

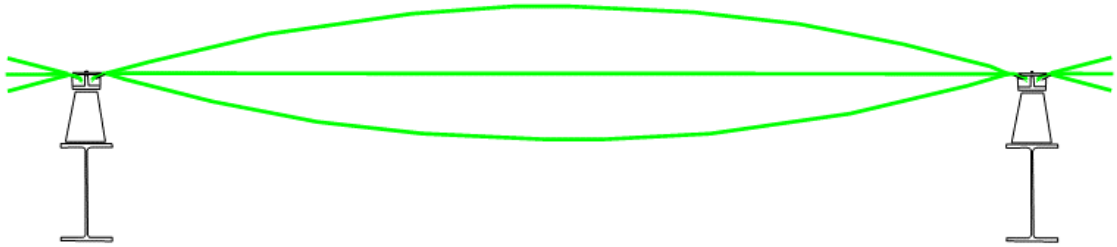

Figure 2: A sketch diagram of a 3-foil ETFE cushion

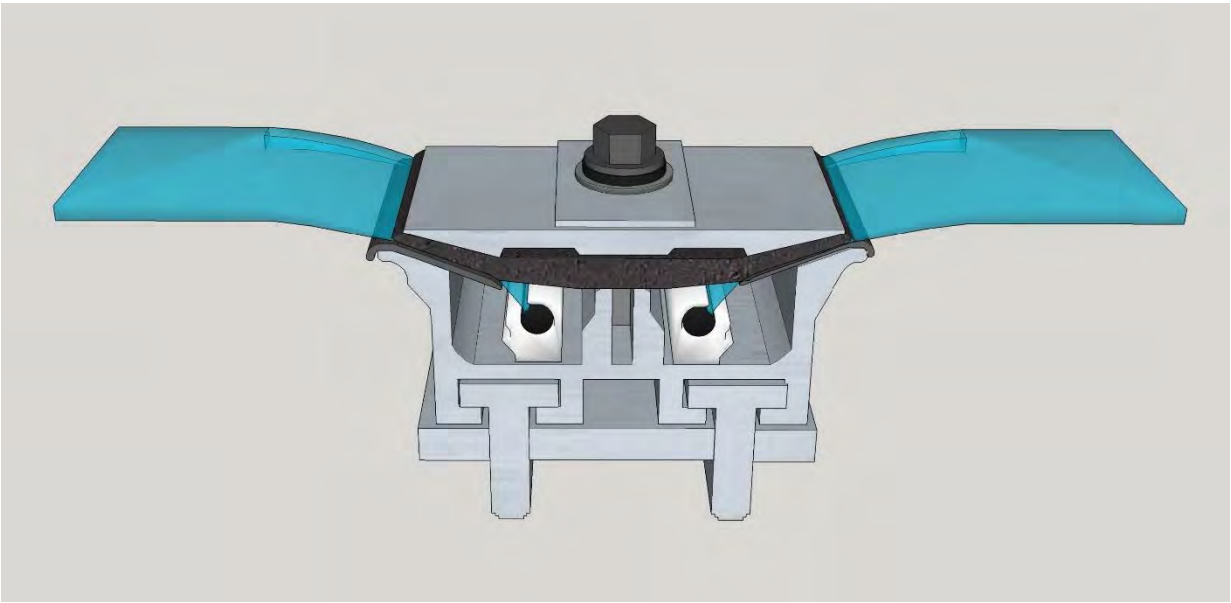

Figure 3: 3D Model of generic ETFE rail and cushion system

Transparency

ETFE films can be up to 95 percent transparent and allow for the passing of ultra violet light, which is responsible for promotion of photosynthesis and facilitating plant growth. The amount of solar shading and transparency can be changed by adjusting the translucency, density and number of layers, as well as with the use of frit patterns. While colors can be introduced to provide a unique look for the ETFE, the ETFE is generally left transparent with only a slight grey or white hue. In the end, it is no wonder why this material was first used as a greenhouse enclosure. With this new attribute, the potential for stadiums to be fully enclosed but have stationary natural turf becomes much more feasible.

Solar Control

ETFE foil systems can incorporate a number of frit patterns on one or multiple layers to alter their solar transmission performance. To achieve this effect, foils are printed with various standard or custom patterns

and can provide varied level of solar transmission or reflection. Depending on the angle of the sun (seasonal change), the level of solar gain can be planned. Much like solar shading outside of a glazed window system, the heat gain can be suppressed in the summer months and allowed in the winter months. In more advanced systems, pressurization of chambers can be raised and lowered in order to move the internal foils, which essentially opens or closes the frit patterns based on operational needs.

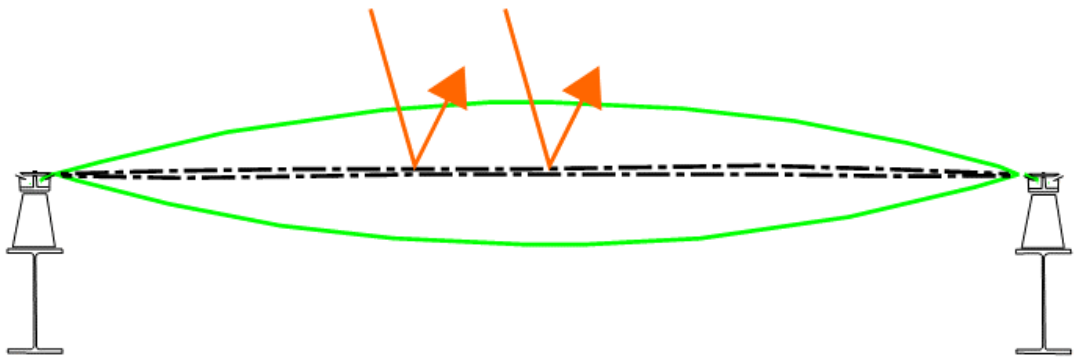

Figure 4: Diagram sketch of a 4 foil ETFE cushion (fritted foils shown as dashed lines) with lower pressurization between the 2nd and 3rd foil closing the frit pattern and limiting solar access during the summer months

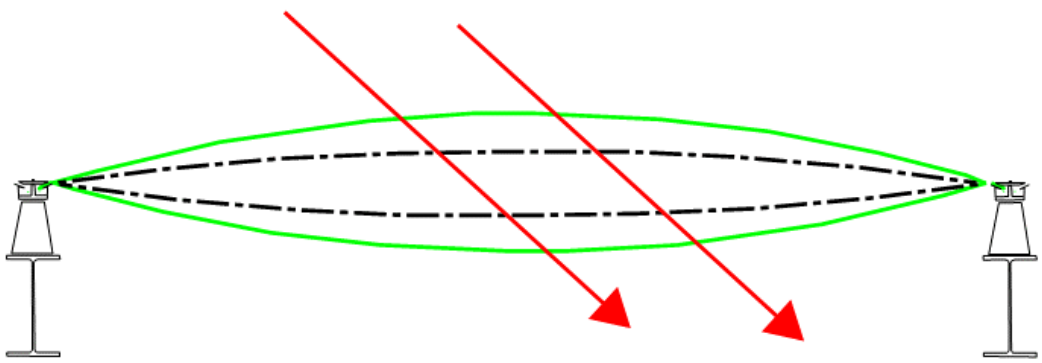

Figure 5: Diagram sketch of a 4 foil ETFE cushion (fritted foils shown as dashed lines) with higher pressurization between the 2nd and 3rd foil opening the frit pattern and allowing solar access during the winter months

Weight

Arguably the most economically desirable property of an ETFE foil system is its weight. Although you can barely measure the thickness of a single ETFE foil without a specialized instrument, when the material is built into a cushion it expands to create a structural barrier several feet in depth. Weighing in at roughly 1 percent of the weight of glass, it can reduce the cost of the structural support system significantly. Even with the addition of the extra foil layers to produce an inflated cushion, aluminum extruded components and flashings, inflation tubing system, and roof weights are often reported to be considerably lighter when compared to a glazed system.

Fire

Like many of the other plastic-type building materials, there is always a concern for how the material will behave in the event of a fire. NFPA 285 - *Fire Test Method for Evaluation of Fire Propagation Characteristics of Exterior Non-Load-Bearing Wall Assemblies Containing Combustible Components* has literally changed the direction of many projects, limiting material and system selections based on flame spread and surface burning characteristics. ETFE has undergone the full gamut of testing and has been rated under different national and international standards as self-extinguishing, with no melting or dripping of molten, burning material. When exposed to fire or temperatures above 500 °F (260°C), the film simply melts away. The ETFE material is classified under several standards:

- *ASTM E84, Standard Test Method for Surface Burning Characteristics of Building Materials, Class A;*
- *UL 94VTM, Tests for Flammability of Plastic Materials for Parts in Devices and Appliances−Thin Material Burning Test, Class 0;*
- *EN 13501-1, Fire Classification of Construction Products and Building Elements−Part 1: Classification Using Data From Reaction to Fire Tests, Class B-s1-d0; and*
- *National Fire Protection Association (NFPA) 701, Standard Methods of Fire Tests for Flame Propagation of Textiles and Films.*

When ETFE is exposed to fire, it only melts and pulls away in locations where flame is in direct contact, which reduces the risk of a fire spreading across the material or to other adjacent materials. In an atrium space, rather than containing and providing fuel for a fire like a traditional roof system or even a glazed system, ETFE has the unique ability to self-vent the products of combustion to the atmosphere. During a fire event any hot gases impinging on the cushions will cause the foil to soften, lose strength, and melt. In sample tests it was observed that when exposed to flame, the ETFE will shrink back from the plume and disintegrate, venting the fire to the atmosphere. It should be noted that combustion of ETFE occurs in the same way as a number of other fluoropolymers, in terms of releasing hydrofluoric acid (HF). HF is extremely corrosive and toxic, and so appropriate caution must be exercised. In certain applications (vertical) it may not evaporate to the atmosphere. However, the quantity of ETFE material used in a typical roofing system is so small that this limitation is minor. Additionally, ETFE is self-extinguishing, any material that falls from the roof location or is swept upward will not burn occupants, first responders, or other materials should it come into contact with them. This self-venting and self-extinguishing feature of ETFE prevents the buildup of high temperatures under the roof and can prevent catastrophic structural collapse of the primary structure.

Acoustics

ETFE film also has about 70 percent acoustic transmission, making it ideal for projects expecting loud noises. During design development, sound transmission should be considered, as it will indeed transmit sound beyond the ETFE system and to the exterior of the building. Additionally, any sounds originating outside of the structure can be translated inward. In the case of rain on the roof ETFE assembly, it has the potential to sound more like a metal roof than a fabric roof.

Safety/Security

ETFE has a high resistance to deformation, but when that resistance is overcome, it tends to become elastic, which makes it an ideal building component where sudden extreme loads such as earthquakes or blasts could occur. Much like safety films that are placed on glazing, the ETFE is itself a film that cannot shatter. The worst possible damage that could occur to ETFE under a shock-load situation would be a tear or a hole. ETFE will either deflect under load or under extreme cases tear. However, it is unlikely to cause any major damage to other building components, property, or people. In laboratory testing, ETFE has proven to be surprisingly puncture resistant. Projectile and "missile" testing of a three foil cushion showed that a 2" x 4" stud traveling at 60 mph (96.5 km/h) rarely penetrated completely through after being shot at the cushion by an air cannon. Despite excellent performance under these conditions, ETFE is not overly resistant to being cut, not recommended as vertical railing, and should not be used at street or pedestrian levels as it cannot prevent intrusion. Additionally, any ETFE installation has the potential for damage and like any roof will need general ongoing maintenance. Access, repair and maintenance are not routine when compared to traditional roofing systems due to the unique characteristics and damage risks of the ETFE system. Because of this, the specialty design-build contractor will usually provide an extended warranty during the maintenance period to perform this work.

Design Process

ETFE structures are generally specified as design-build projects or a sub contracted portion of a design build project (delegated design) due to the unique characteristics of the system and need for highly specialized and experienced designers. Throughout the design-build process, coordination is critical to the system's overall aesthetics and performance. In general, the basic enclosure performance of the ETFE system is much like a curtain wall glazing system.

PERFORMANCE: AIR AND LIQUID MOISTURE

From a Building Science perspective, technical performance of materials, assemblies, and systems is mainly concerned with the control of four elements: 1) Heat, 2) Air, 3) Moisture Liquid, and 4) Moisture Vapor (known within the building science community as HAMM).

With today's typical ETFE cushion and rail systems, much like a curtainwall glazed system, the main strategy for management of Liquid Moisture and Air is a pressure seal created by the extruded cap plate and silicone gasket placed between ETFE cushions. In laboratory testing, as well as in-field testing, this general assembly has proven to be effective in creating an effective barrier for Air and Water (Moisture Liquid). As with all systems of this type, workmanship is paramount for performance.

Performance - Heat

In general, the thermal performance of an ETFE system can be simplified to be approximately as good as assemblies used in similar situations. A cushion system with three layers of ETFE foil will achieve approximately R-2.9, while a five-layer system will achieve approximately R-4.8. This is similar to a thermally broken, glazed system, however, some key differences do exist. In a typical glazed system, the lites remain parallel and are accepted by the frame carrying close to the same R-value to the perimeter of the

unit. In the ETFE system, the cushion is most thermally efficient at the center of the cushion and less thermally efficient closer to the edge of the cushion. As the cushion pinches into the extruded frame, the air space between the foils becomes smaller and smaller until eventually the separation between exterior and interior is simply the thickness of the number of foils included in the cushion. Without the air between the foils the R-value for the system is minimal.

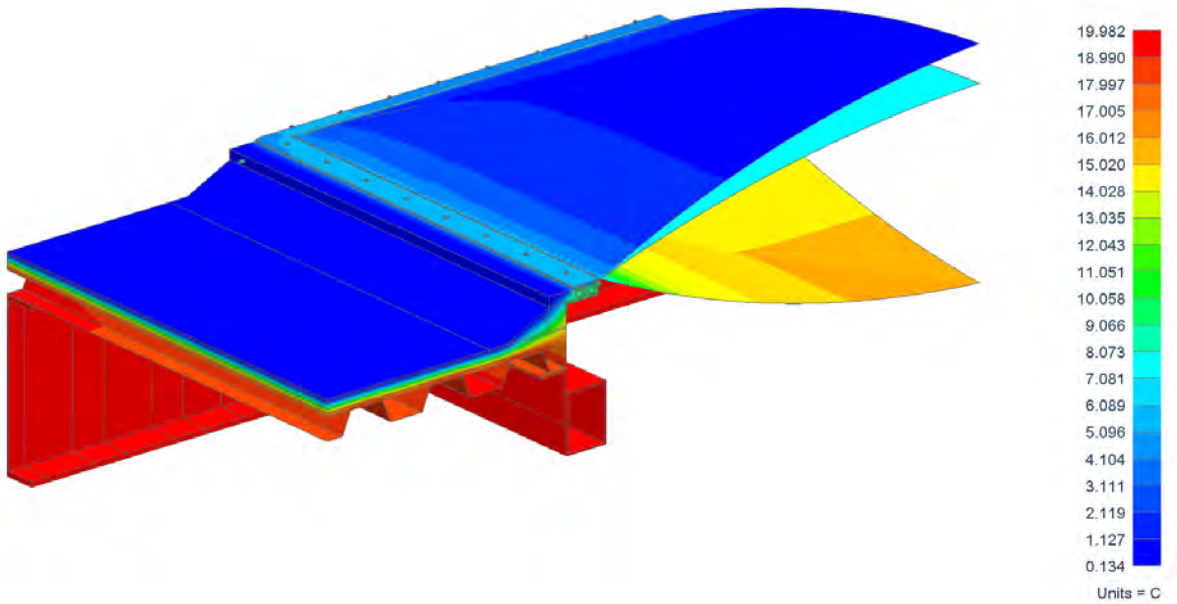

Figure 6: Cross section of rail and cushion showing thermal gradient

3D thermal modeling was performed on a generic ETFE system to better understand the risk of interior condensation when utilizing a three foil cushion in northern climates at various temperatures that could be experienced across the United States and Canada. As noted above, the least thermally insulating part of an ETFE assembly is near the cushion to frame interface, which corresponds to the location of highest condensation risk. As such, the team chose to model a typical section cut through a cushion to frame interface near a corner. The modelled section covers the intermediate mullion between ETFE cushions and the transition to the traditional single-ply roofing system.

Modeling was performed using the Nx software package from Siemens, which is a general purpose computer aided design (CAD) and finite element analysis (FEA) package. The thermal solver and modeling procedures utilized for this study were extensively calibrated and validated for ASHRAE Research Project 1365-RP "Thermal Performance of Building Envelope Details for Mid- and High-Rise Construction (1365-RP)" and guarded hot box measurements. The thermal analysis utilized steady-state conditions and published thermal properties of materials. Glazing air cavities and film coefficients were based on ISO 10077-2:2003 (E) "Thermal performance of windows, doors and shutters — Calculation of thermal transmittance — Part 2: Numerical method for frames". Boundary conditions were modeled using heat transfer coefficients for convection (i.e. film coefficients). Radiation, to the interior and exterior, was directly simulated using assumed view factors and emissivity for the system. Materials conductivities and surface coefficients are given in Appendix A.

The model was analyzed for 4 different exterior temperatures, 32°F, 14°F, 0°F and -22°F (0°C, -10°C, -18°C, -30°C). The interior temperature modeled was 68.9°F (20.5°C), which represents a conservative air temperature. For all temperature conditions, the exterior wind speed was modelled at 15 mph (24.14 km/h) and set to night time conditions. This was taken as a "typical worst case" set of winter time conditions that do not include any influence from solar heating.

Performance – Moisture Vapor

The materials that are used in the ETFE assembly are designated as Class I Vapor Retarders (0.1 perm or less) - essentially impermeable to vapor. Simply put, they have the potential to drastically slow vapor movement and if the temperature of the material reaches the dew point, condensation may occur. To understand the potential for condensation due to surface temperatures, the average steady-state conductive heat flow in three-dimensions were analyzed. It must be recognized that the objective of this analysis was not to predict in-service surface temperatures subject to variable conditions and/or heating systems. In-service surface temperatures of glazing systems are highly dependent on variable surface resistances and as such will vary from system to system. In contrast, the condensation risk was evaluated by determining surface temperatures subject to standard constant surface resistances for steady-state conditions.

Interior surface temperatures at key areas for evaluating the risk of condensation are highlighted in Figure 7. These areas include the coldest surface temperatures and locations with the greatest risk of condensation. The color isothermal plots illustrate the variation of the temperature viewed from the interior. T1 and T3 are along the intermediate mullion section, between two ETFE pillows, while T2 and T4 are at the transition between the ETFE and the metal deck roofing. T1 and T2 temperatures were taken directly on the ETFE pillow, 1" away from the framing.

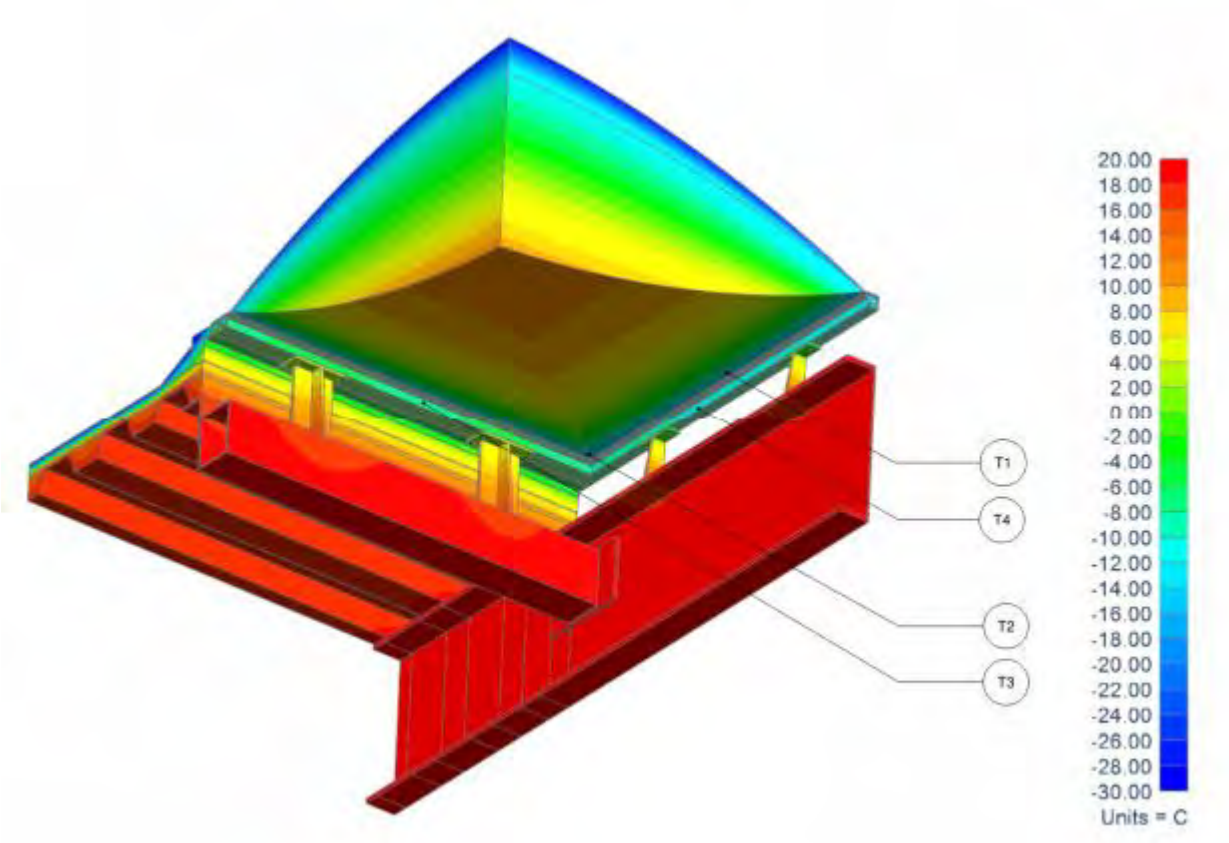

Figure 7: 3D Thermal model of 3 foil ETFE cushion in a northern climate at -22°F (-30°C)

Figure 8 summarizes the simulated surface temperatures at key locations for varying exterior temperatures that could be experienced in multiple locations and indicates the indoor relative humidity level at which condensation may occur (Max Allowable RH%). The table contains all the temperature scenario conditions described above in the modelling procedures.

Exterior Temp (°F) (Celsius)	Location							
	T1 – Bottom ETFE Sheet Edges		T2 – Bottom ETFE Sheet Corner		T3 - Extrusion frame by SBS		T4 – Extrusion frame perp to SBS	
	Surface Temp (°F)	Max Allowable RH %	Surface Temp (°F)	Max Allowable RH %	Surface Temp (°F)	Max Allowable RH %	Surface Temp (°F)	Max Allowable RH %
32 (0)	44.4	**43%**	44.1	**42%**	48.9	**50%**	45.3	**44%**
14 (-10)	32.4	**27%**	32.0	**26%**	39.4	**35%**	33.8	**28%**
-0.4 (-18)	23.4	**17%**	22.5	**17%**	31.6	**26%**	24.8	**19%**
-22 (-30)	8.6	**8%**	7.7	**8%**	20.3	**15%**	11.3	**10%**

Figure 8: Simulated surface temperatures as key locations

Morrison Hershfield found that in northern climates across North America the likelihood of condensation

occurring exists with a generic 3-foil ETFE cushion system but will depend not only on what the expected interior humidity and heating conditions are but also convective or forced air flow patterns. During winter conditions, the humidity contribution from the exterior air used for interior ventilation may be low if there is not any additional moisture generation (humidification or occupant load). In this generic scenario, if the internal conditions for the ETFE atrium space are at or above 25% RH (depending on the expected moisture generation from occupancy) there may be some risks of interior frost formation when the exterior temperatures are below 14°F (-10°C). The extent of this formation will also depend on the length of time the exterior temperatures remain below 14°F (-10°C).

Morrison Hershfield also found the adjacent assembly can impact the ETFE's system ability to resist condensation and this should be addressed on a case by case basis. As with many low R-value fenestration options, there are several strategies that could be explored to reduce the risk of condensation, including using additional insulation to increase surface temperatures, increasing air flow at the ETFE system level using blowers, or using radiant heaters.

Wind, Rain, and Snow Management

As with any roof, a formal review of wind loads or wind study specific to the case roof's geometries should be completed. The ETFE system will be designed and built appropriately to handle design pressures, but this design is dependent on the design of the structural support that will hold the ETFE system. In many cases, the support system has been fine tuned for weight consideration and this must be balanced with the given loads for each area of the roof.

The roofing or cladding system needs to not only deflect the rain, and in some climate zones snow, but also the runoff or accumulation need to be managed. In typical roofing scenarios, perimeter drains or in-roof drains are often utilized. However, in ETFE systems, water drainage and management strategies are often much more complicated, as drains are unable to be hidden within the structure and transitions to gutters can present challenges.

In the case of a northern climate, certain complications exist with the formation of ice and accumulation of snow on the roof. While the cushions are pressurized according to the assumed design loads, in extreme snow and ice accumulation events, many times the design weight can overwhelm the cushion pressurization and localized cushion deflation can occur. Due to this fact, the major manufacturers of ETFE systems have incorporated snow cables as a structural back up plan. These cables are designed into the system based on load potential at any given location, and are intended to support the intact, but partially deflated cushion if the structural air within the system becomes overwhelmed. In the event of such a partial deflation, a second safety mechanism begins to take effect. While snow and ice can build up in a bowl-shaped, deflated cushion, as the cushion deflates, it loses its thickness, structural air, and insulating value, which may cause the interior heat of the building to melt the ice or snow. Once melted, water will simply run off at the rim or low end of the perimeter extrusion. In this way, the system can react to localized areas of ice and snow build up by lowering its R-value and melting the snow. Once the snow/ice begins to melt it slides easily down the slope of the system. However, a heated interior and loss of heat is required for this mechanism to be effective. Once the high loads are relieved, the system automatically re-inflates any affected cushions, restoring the system's insulating value.

Figure 9: Manual removal of snow from an ETFE system. *Photo credit: SurfaceDesign*

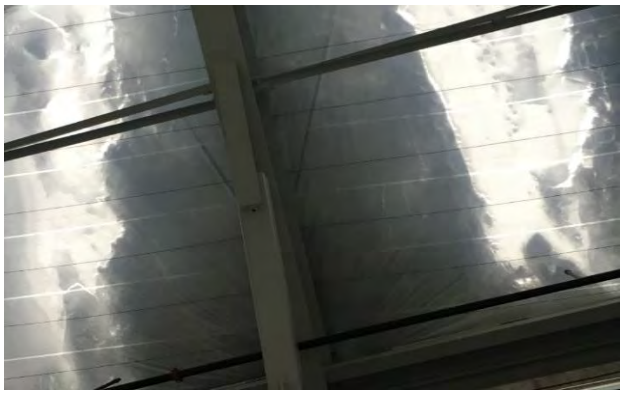

Figure 10: An ETFE system in a deflated state, supported by snow cables, with snow load. *Photo credit: SurfaceDesign*

PROJECT SPECIFIC DETAILING AND HOLISTIC PROCESS

In all cases, ETFE systems' portion of the project should be considered a custom design-build aspect of the project. While the major manufacturer/designers/contractors are beginning to understand efficiencies of re-using similar rail and cushion systems, the ETFE only serves as a portion of the enclosure. The interfaces with adjoining materials, assemblies, and systems will always occur. This proves to be the biggest hurdle to overcome when working with an ETFE system. Whether the ETFE is interfacing with a membrane roofing system, a curtainwall glazed system, metal panels, or even a brick veneer, the continuity of barriers needs to be maintained. In the case of an aluminum extrusion rail with a pressure cap, the adjacent material may lend itself to be fed directly under the cap plate of the system (for example, a single ply roof membrane). In other cases, a more elaborate transition assembly may need to be developed in order to allow for movement, provide a traffic walk-way, or other integration concerns. These interface details need to be fully coordinated with the complete team ensure functional performance.

Project specific detailing will need to be approached in Schematic Design (SD), Design Development (DD), Contract Documents (CD), and shop drawings. As early as SD, a formal wind study (and snow/ice if northern climate) should be completed to understand the feasibility of using ETFE roofing/cladding on the project, as well as to help guide project-specific detailing. Also in SD, the functional performance of the proposed ETFE assembly should be reviewed and tested, if warranted. Often, laboratory testing (air, water, wind, condensation, blast, missile, etc.) of the proposed system has been completed in the past and the results can be applied to a new project with review of laboratory testing reports. In the case of a custom design, full assembly mock-ups should be constructed in order to demonstrate performance in laboratory testing. Ideally, any issues or concerns identified at this stage should allow ample time for adjustments or a significant change to assemblies to be tackled. By the DD phase, the final ETFE assembly selection should be finalized, as well as the adjacent systems to which the ETFE will interface. Once in CD phase, it is recommended that the design team, often in conjunction with an envelope consultant familiar with ETFE, bring the project specific details to a final point, taking into account all of the conditions where the ETFE will interface with other assemblies. When CD detailing is not coordinated, the various trade's shop drawings often differ in means and methods, resulting in incompatible connections and/or scope gaps. In the absence of good detailing ahead of time, coordination efforts increase dramatically as construction gets underway, resulting in RFI's and Change Orders that could have been avoided.

Once the coordination of the ETFE system is as complete as possible, it is recommended that on-site visual and performance standalone mock-ups be constructed that incorporate the interface conditions (laboratory mockups already completed may suffice). These mock-ups help refine coordination and sequencing issues as this often unfamiliar system is tied together with more typical systems. On-site mock-ups should include the exact materials that will be installed in the field, and should be installed by the same sub-contractor personnel who will be working on the project. Performance testing should also be completed at this stage, primarily focused on air leakage and water penetration. To better permit testing and detailed visual review, standalone mock-ups are recommended instead of an in-situ mock-up, as access is usually very limited in the locations where ETFE systems are installed.

Finally, it is highly recommended that a careful Quality Control (QC) program be implemented by the design-build contractor as well as third party envelope consultant during installation of the ETFE assembly. Well implemented and understood quality control programs have been shown to have substantial positive impacts on workmanship quality.

CASE STUDIES

Forsyth Barr Stadium

Known locally as the "Glass House", the giant roof of the Forsyth Barr Stadium in Dunedin, New Zealand is the world's first stadium with a non-operable roof to boast a stationary blended natural and synthetic turf. This is only possible due to the high transparency of ETFE in all light wavelengths used for photosynthesis. A total of 220,660 square feet of transparent ETFE covers the field area. Supporting the nearly 300 double-layered cushions are 5 external arch trusses that span 345ft from the tops of stadium seats. Though the roof system has an internal clearance of 121ft and a maximum height of 154ft, its light weight made it possible to be supported by only 33ft tall external arch trusses. Between each of the arches is a series of flat trusses that support four long, inflated ETFE cushions. Although the turf is buffered with a synthetic component to assist with the heavy impact traffic, it is still highly sought after for its natural feel and play.

Figure 11: ETFE roof spanning the playing field

Figure 12: A blend of synthetic and natural turf

ETFE: Vector Foiltec

Architect: Populous - Jasmax

Owner: Carisbrook Stadium Trust

Engineer: Grayson Engineering Ltd.

General Contractor: Hawkins Construction

Completion Date: 2011

Center Parcs

Center Parcs, Vienne, is a waterpark that is open to the public all year long thanks to its ETFE roof. The ETFE roof covers 63,000 square feet, with 3-foil ETFE cushions. This project emphasizes the unparalleled design flexibility with its unique shapes and artistic form. Additionally, the occupants, including the plant life, are treated to the full spectrum of needed light with the ETFE being permeable to both natural light and UV rays.

Figure 13: Indoor aquatic park. *Photo credit: Birdair*

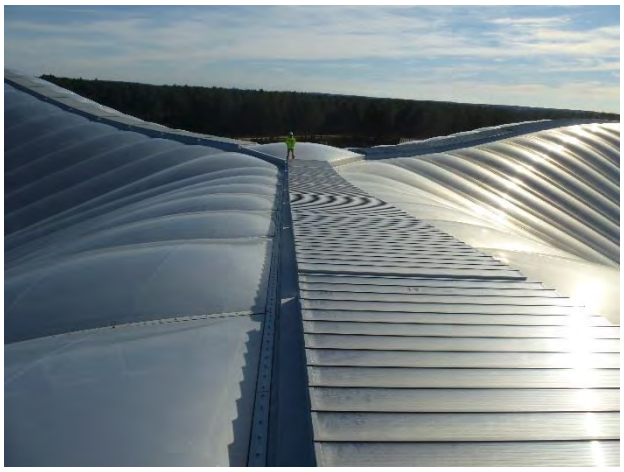

Figure 14: ETFE roof system from exterior. *Photo credit: Birdair*

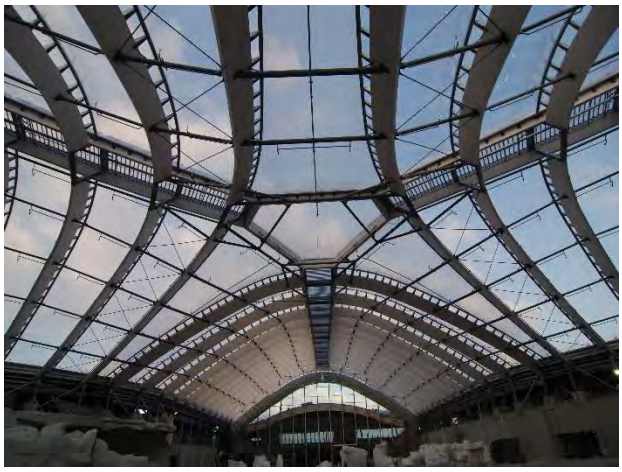

Figure 15: Installation of ETFE cushion. *Photo credit: Birdair*

Figure 16: ETFE roof system from interior. *Photo credit: Birdair*

ETFE: Birdair

Architect: ART'UR Architects

Owner: Groupe Pierre & Vacances Center Parcs

Engineer: LEICHT

Completion Date: 2015

US Bank Stadium

The new US Bank Stadium in Minneapolis, Minnesota is one of the first major sporting venues in the United States to incorporate ETFE. The roof of the new home for the NFL's Minnesota Vikings will be fixed, but 60 percent of it was constructed using 240,000 square feet of ETFE. The ETFE roof is comprised of 75 cushions, the longest measuring over 300 ft. in length. To date, US Bank Stadium is the largest ETFE installation in North America, and is the only stadium in the nation with a clear ETFE roof. However, the decision was still made to proceed with an artificial field turf instead of natural due to the multiple event venues that the stadium will host. Because of the slopes of the roof, ETFE material on the south side will make up 60 percent of the entire roof, while a traditional single-ply roof over metal decking will account for the remaining 40 percent on the north side where the solar exposure benefits are reduced. Though the ETFE will not cover the entire field, the angle of the roof allows sunlight over its entirety. Even on a cloudy day, the interior of the stadium will be well lit without the assistance of artificial lighting. Rain and snow management are handled with a sloped roof strategy that empties into a large snow gutter system encircling the building. In the case of snow, this gutter has an ice/snow melt system that will melt and drain it away. Having already been in place through one winter season while under construction, the ETFE roof was observed to shed snow better than the single ply membrane roof on the opposing slope.

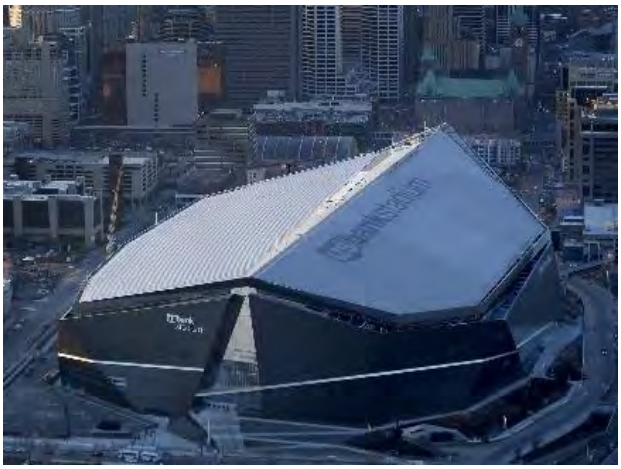

Figure 17: View of roofing systems, ETFE (left), Single-Ply Membrane (right)

Figure 18: Stadium at night with interior lighting coloring the ETFE and curtain wall assemblies. *Photo credit: www.Vikings.com*

Figure 19: Installation of ETFE cushions

Figure 20: Installation of ETFE cushions

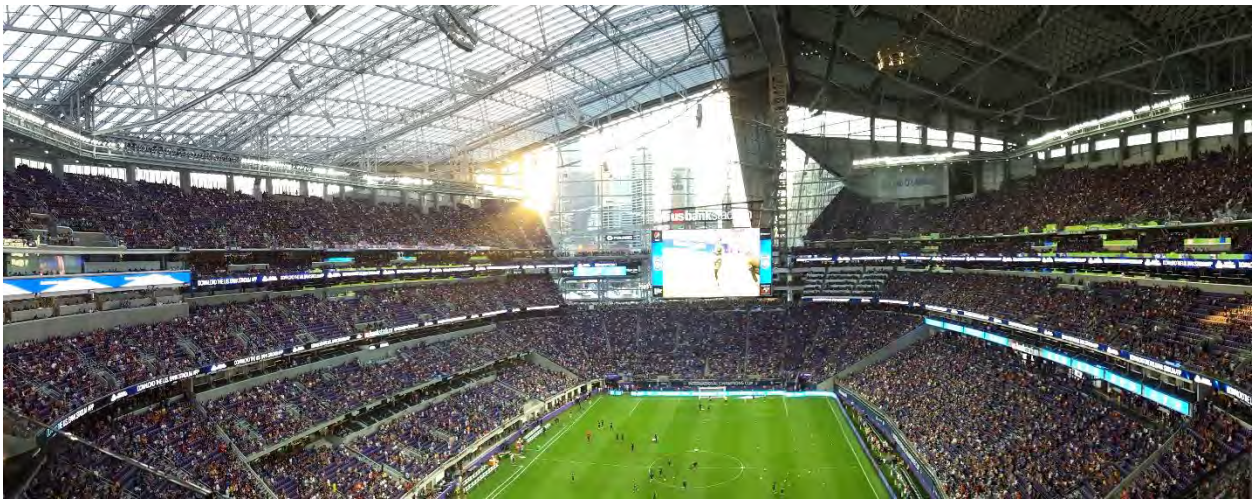

Figure 21: The interior of the US Bank Stadium highlighting the open air feel created by the ETFE system

ETFE: Vector Foiltec

Architect: HKS

Owner: Minnesota Sports Authority

Owners Rep: Hammes Co.

Engineer: Thornton Tomasetti

General Contractor: Mortenson – Thor JV

Completion Date: 2016

Mercedes Benz Stadium

The NFL Atlanta Falcons will enjoy ETFE accents on their new $1.8 billon stadium slated for completion in 2017. The stadium's operable roof consists of three-layered ETFE cushions on eight "petals" that retract radially, similar to a camera's aperture diaphragm. Additionally, the facade will feature a single-foil ETFE skin supported by a cable net system. The design requires approximately 135,000 square feet of triple-layered ETFE pillows with an air inflation system for the roof, and approximately 165,000 square feet of vertical, single-layered ETFE film and cable net for the vertical portion. Even when closed, the combination of the ETFE roof and wall areas will create an outdoor feel, allowing in natural sunlight when the weather is clear, and protect players and fans during inclement weather. In addition to the transparency benefits, ETFE was a good match for the operable mechanisms employed in the center portion of the roof as opposed to a glazed assembly. It became clear during the design process that the stresses of operational movement posed a risk of broken glazed units and negative impacts on the seals if the team went with a traditional glazed system. With the lightweight and flexible nature of the ETFE petals, the Atlanta Falcons operable roof is expected to be an engineering marvel.

Figure 22: Rendering of Mercedes Benz Stadium showing ETFE roof system and ETFE cladding system. *Photo credit: HOK*

Figure 23: Current construction of stadium. *Photo credit: www.11Alive.com*

ETFE: Birdair

Architect: HOK & tvsdesign

Owner: AMB Sports & Entertainment

Owners Rep: Darden and Company

Engineer: Buro Happold

General Contractor: Holder - Hunt - Russell - Moody JV

Completion Date: 2017

Detroit Entertainment and Event Center

The main arena of the Detroit Entertainment and Event center, which will be home to the NHL's Red Wings. The main roof area will be constructed using traditional low-sloped roof assemblies, however, the street-like walkway between the arena and surrounding structures, referred to as the 'Via', will be covered with a three-foil ETFE cushion system. This lightweight and translucent structure will provide a cost effective and aesthetically pleasing enclosure for a space that is designed to feel like an outdoor street year-round. Even as visitors enter from the exterior and through the perimeter building into the 'Via', they will be able to look up and see the impressive arena rising overhead while in the comfort of an indoor environment.

Figure 22: Rendering of the Detroit Entertainment and Event Center. *Photo credit: The District Detroit/HOK*

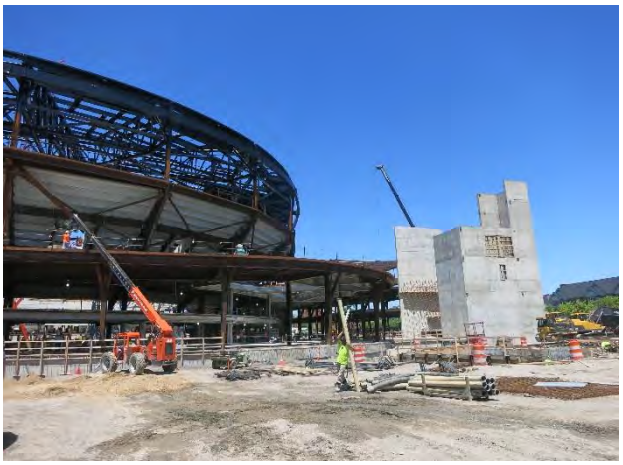

Figure 23: Current construction of arena and surrounding structures.

ETFE: Vector Foiltec

Architect: HOK

Owner: The District Detroit

Owners Rep: Hines

Engineer: Magnusson Klemencic Associates

General Contractor: Barton Malow – Hunt – White JV

Completion Date: 2017

CONCLUSION

ETFE has made an impressive impact around the world and recently on the North American building community, and with some of the pinnacle structures of this generation being crowned by the unique material, its popularity is sure to grow. The attributes of being light-weight, durable, and transparent set ETFE apart from other industry–standard materials and assemblies. Add to that the aesthetic factor of providing a near invisible separation from the exterior, and letting in almost uninhibited natural light, ETFE becomes a very attractive solution. As with all systems, there remain potential risks. The potential for condensation under certain interior conditioning loads in northern climates needs to be carefully analyzed and addressed to

minimize risk. Interfaces with surrounding materials and systems needs to be carefully designed and diligently coordinated during construction to ensure total enclosure performance. The unique characteristics of this material and the assemblies in which it is used are a clear example of the importance of employing a holistic process of design, construction, and performance testing to ensure success.