REFERENCE PROCEDURE FOR SIMULATING SPANDREL PANEL U-FACTORS

CCBST 2017

NOVEMBER 8, 2017

DANIEL HAALAND

RDH BUILDING SCIENCE

Overview

→ **Who**
Developed through FENBC, with funding from BC Housing

→ **What**
A reference procedure for determining spandrel panel U-factors

→ **Why**
Address an identified need for additional guidance on how to treat spandrel panels

→ **How**
Supplement and extend existing NFRC-100 methodology.

Reference Procedure Scope

→ This procedure is specifically for the determination of spandrel U-factors using **2-D thermal simulation** only

→ Physical testing and validation is outside the scope

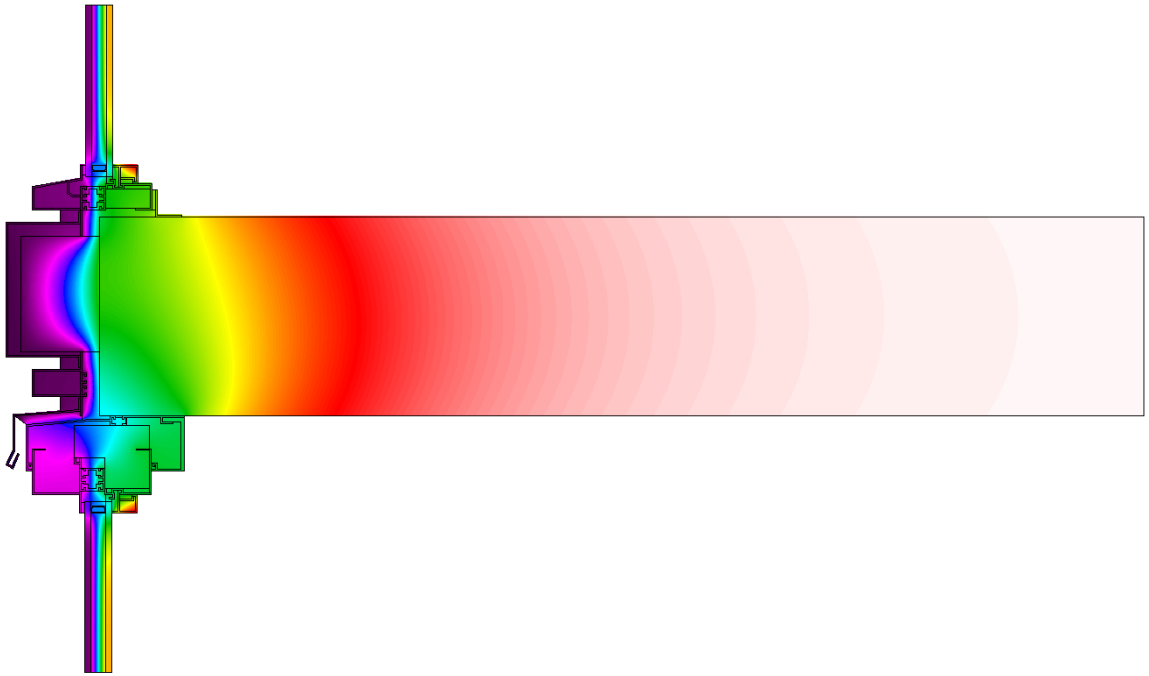

Energy Code (ASHRAE 90.1 – 2010)

Opaque

$>R_{IP}15.6$

5.5.3 Opaque Areas. For all *opaque* surfaces except doors, compliance shall be demonstrated by one of the following two methods:

a. Minimum *rated R-values of insulation* for the *thermal resistance* of the added insulation in framing cavities and *continuous insulation* only. Specifications listed in Normative Appendix A for each *class of construction* shall be used to determine compliance.

b. Maximum *U-factor, C-factor,* or *F-factor* for the entire assembly. The values for typical *construction* assemblies listed in Normative Appendix A shall be used to determine compliance.

NFRC-100

5.8.2.4 U-factor. *U-factors* shall be determined in accordance with NFRC 100. *U-factors* for *skylights* shall be determined for a slope of 20 degrees above the horizontal.

What does NFRC 100 say?

Spandrel: the opaque areas of a building envelope that typically occur at locations of the floor slab, columns, and immediately below roof areas

What does NFRC 100 say?

5.9.6.3 Complex Product Rating

This section provides the details of additional non-residential product types and their model (standard) sizes for rating purposes.

5.9.6.3.1 Spandrel Panel

Spandrel panels shall be rated for U-factor at the size specified in Table 4-3.

A Single
Standard size

Another glazing option

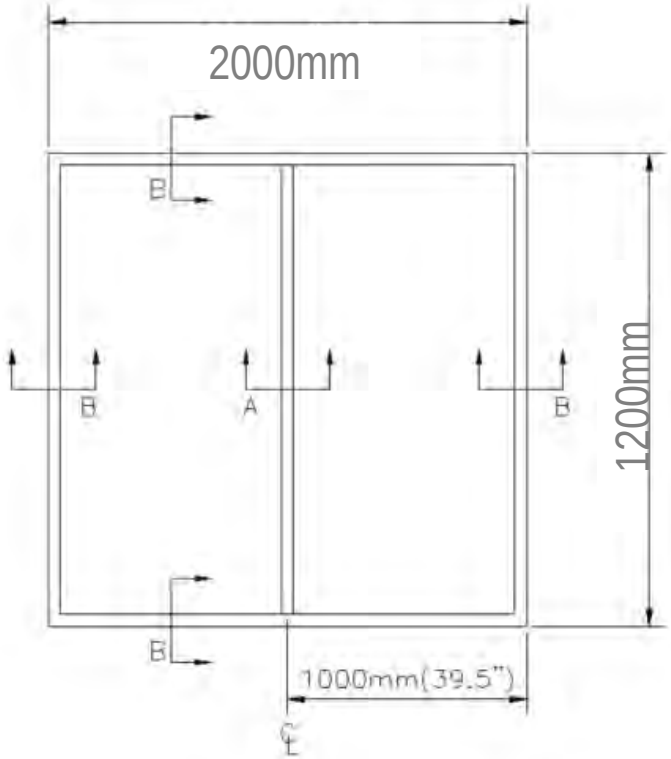

Spot the “Standard” spandrel…

There is a need for additional spandrel arrangements

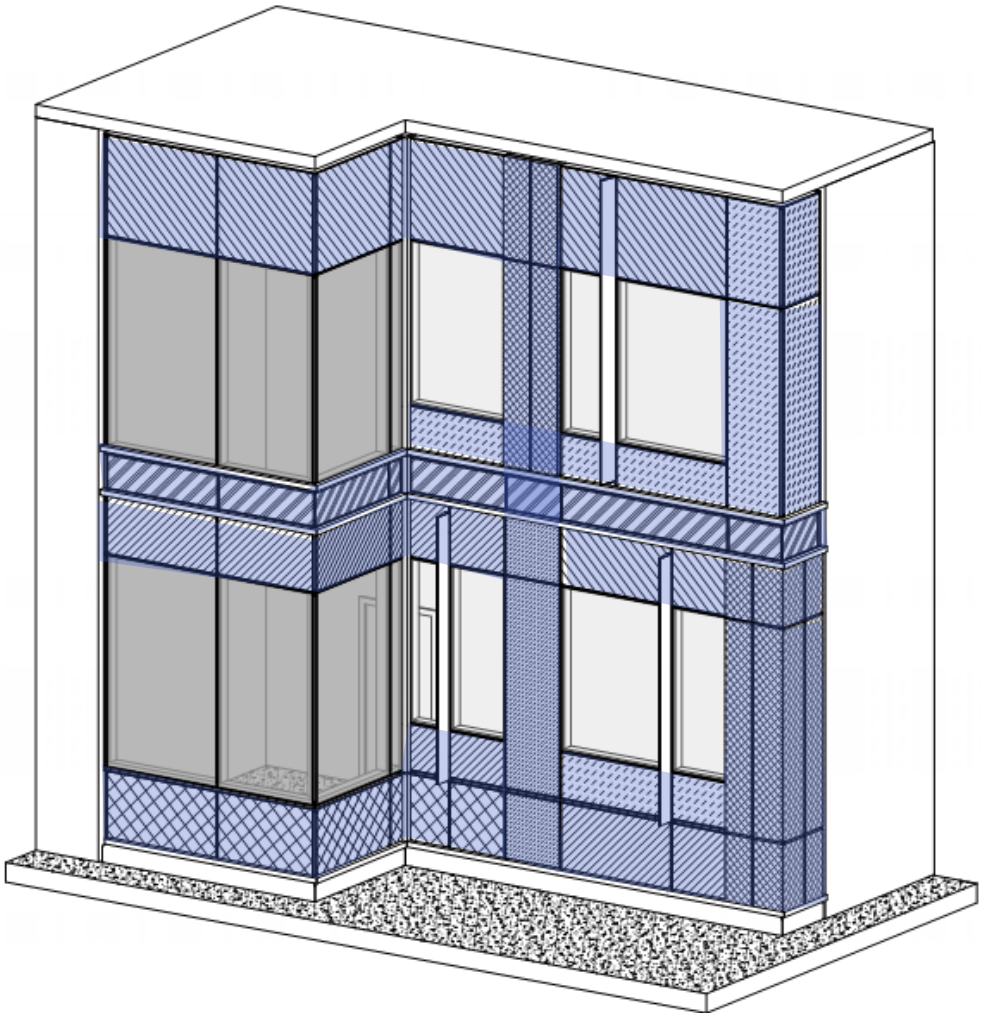

Relative Size of Frame Matters

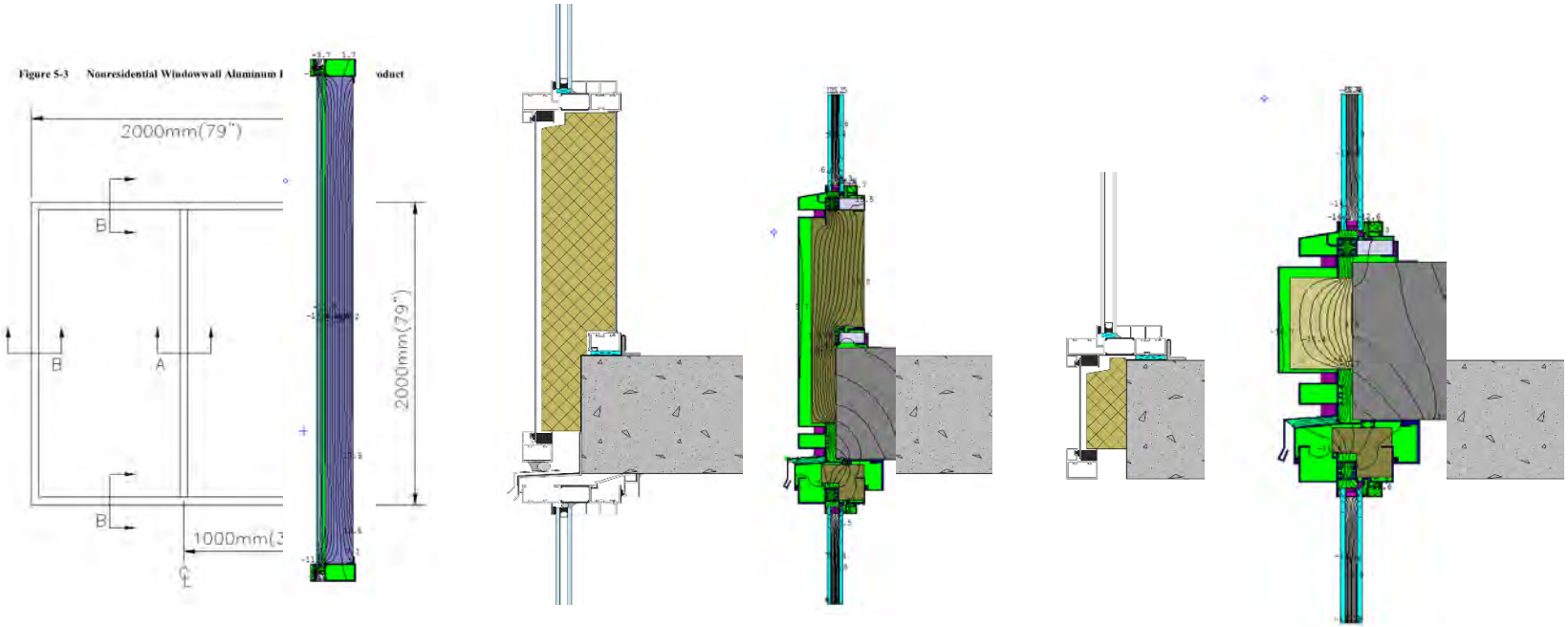

Panel to Frame Ratio	<90%	<80%	<50%
U-Value	U-0.70 ($W/m^2 \cdot K$) U-0.12 ($Btu/hr \cdot ft^2 \cdot {}^oF$)	U-1.53 ($W/m^2 \cdot K$) U-0.27 ($Btu/hr \cdot ft^2 \cdot {}^oF$)	U-2.42 ($W/m^2 \cdot K$) U-0.43 ($Btu/hr \cdot ft^2 \cdot {}^oF$)
	R_{IP}-8.3	R_{IP}-3.7	R_{IP}-2.3

Are Spandrels an “Additional Glazing Option”?

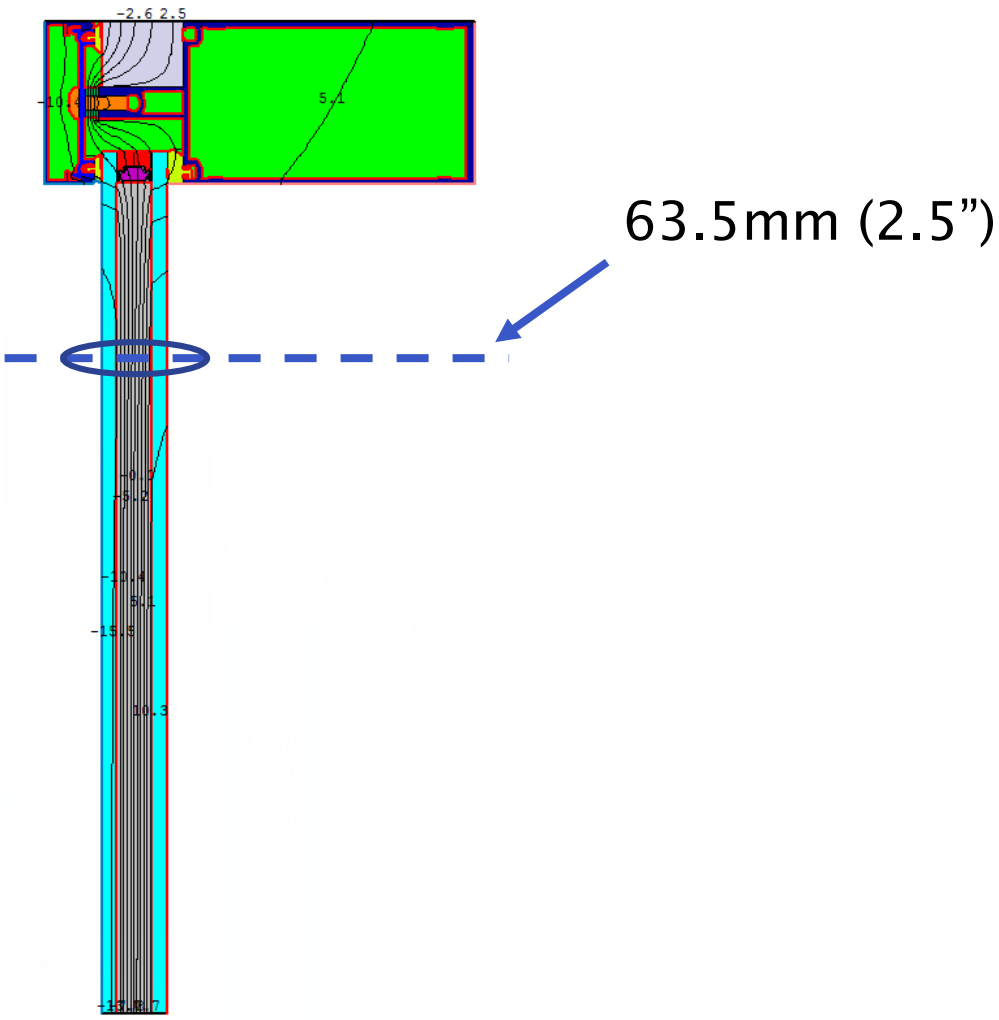

Are Spandrels an “Additional Glazing Option”?

There is a need for wider edge distances

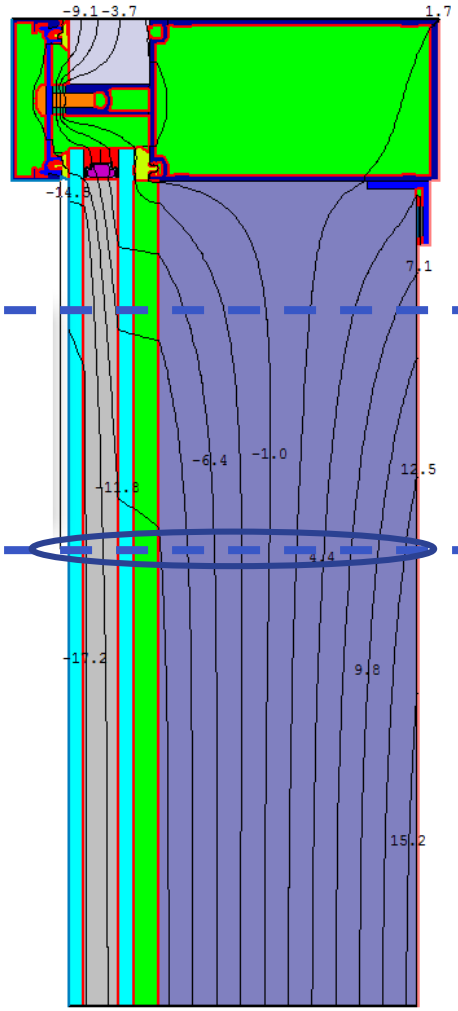

63.5mm (2.5”)

152mm (6”)

Moving Toward a New Methodology

Gaps

→ Single product size does not capture product variability

→ Edge distance does not capture the "edge"

Priorities

→ Product comparison

→ More realistic thermal performance (U-factor) data

→ Leverage existing tools and expertise

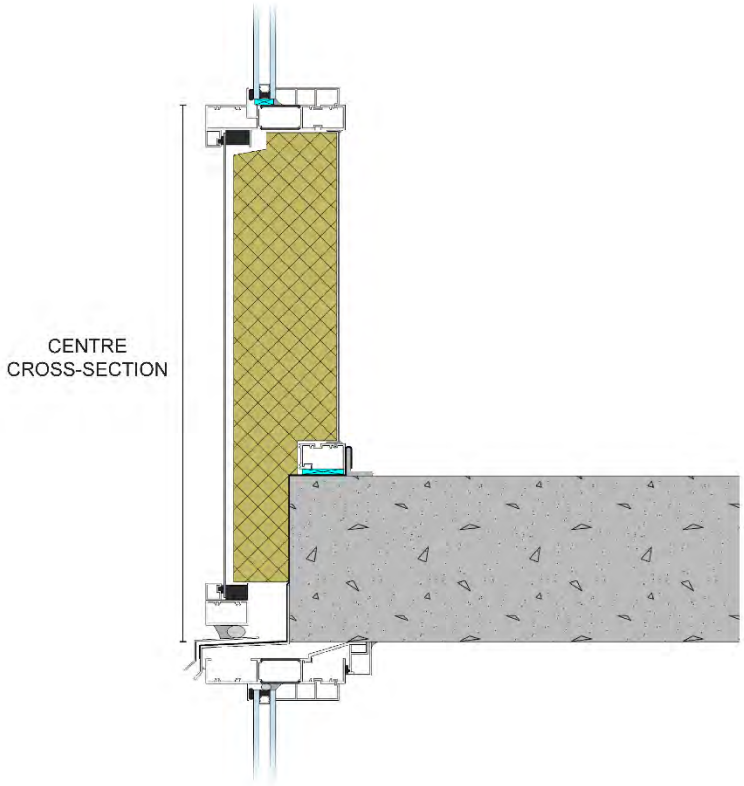

Procedure

→ NFRC 100 procedure is followed generally, including:

- → Products are rated at **standard sizes**
- → Products are separated into frame, edge of spandrel, and center of panel components; **U-Factor x Area**
- → Boundary conditions, material properties, etc.,

Table 4-3 – Product Types and Model Sizes

Product Type	Opening (X) Non-operating (O)	Model Size (width by height) SI (IP)
Casement – Double[1]	XX, XO, OO	1200 mm x 1500 mm (47 in x 59 in)
Casement – Single	X[6]	600 mm x 1500 mm (24 in x 59 in)
Dual Action	X[6]	1200mm x 1500 mm (47 in x 59 in)
Fixed (includes non-standard shapes)	O	1200 mm x 1500 mm (47 in x 59 in)
Garage(Vehicular Access)/Rolling Door	X[6]	2134 mm x 2134 mm (84 in x 84 in)
Greenhouse/Garden[2]	X[6]	1500 mm x 1200 mm (59 in x 47 in)
Hinged Escape	X[6]	1500 mm x 1200 mm (59 in x 47 in)
Horizontal Slider	XO or XX	1500 mm x 1200 mm (59 in x 47 in)
Hybrid Tubular Daylighting Device	O	530 mm Dia. (21 in Dia.)
Jal/Jal Awning	X[6]	1200 mm x 1500 mm (47 in x 59.in)
Pivoted	X[6]	1200 mm x 1500 mm (47 in x 59 in)
Projecting (Awning, Dual)	XX[6]	1500 mm x 1200 mm (59 in x 47 in)
Projecting (Awning – Single)	X[6]	1500 mm x 600 mm (59 in x 24 in)
Door Sidelite[5]	X or O	600 mm x 2000 mm (24 in x 79 in)
Skylight/Roof Window	X[2]	1200 mm x 1200 mm (47 in x 47 in)
Sliding Patio Door with Frame	XO or XX[8]	2000 mm x 2000 mm (79 in x 79 in)
Curtain Wall/Window Wall/Sloped Glazing	OO[3]	2000 mm x 2000 mm (79 in x 79 in)
Spandrel Panel	OO	2000 mm x 1200 mm (79 in x 47 in)
Swinging Door with Frame	O, X, XO or XX[4]	960 mm x 2090 mm (37 3/4 in x 82 3/8 in); or 1920 mm x 2090 mm (75 1/2 in x 82 3/8 in)
Door Transom[5,7]	O	2000 mm x 600 mm (79 in x 24 in)
Tropical Awning	X[6]	1500 mm x 1200 mm (59 in x 47 in)
Tubular Daylighting Device	O	350 mm Dia. (14 in Dia.)
Vertical Slider	XO or XX	1200 mm by 1500 mm (47 in by 59 in)

4.8 Figures

Figure 4-1 – Fenestration Product Schematic – Vertical Elevation

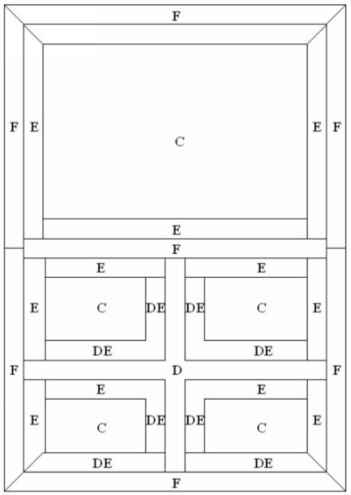

LEGEND
C Center-of-glazing
E Edge-of-glazing
F Frame
D Divider
DE Edge-of-divider

Arrangements

Configuration 1	Configuration 2	Configuration 3
Uninterrupted Spandrel	Partially Interrupted Spandrel	Fully Interrupted Spandrel
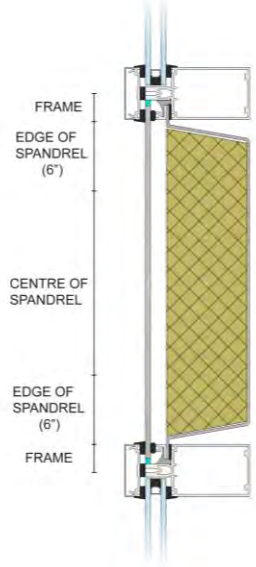	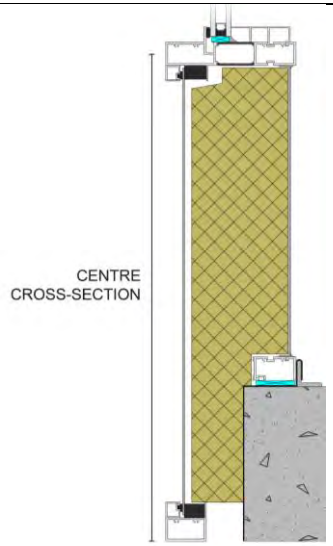	
2000 mm x 1200 mm (79 in x 47 in.)	2000 mm x 1200 mm (79 in x 47 in.)	2000 mm x 203 mm (79 in x 8 in.)

Arrangement 1 – Uninterrupted Spandrel

→ Spandrel panel is completely uninterrupted (i.e., a typical curtain wall arrangement)

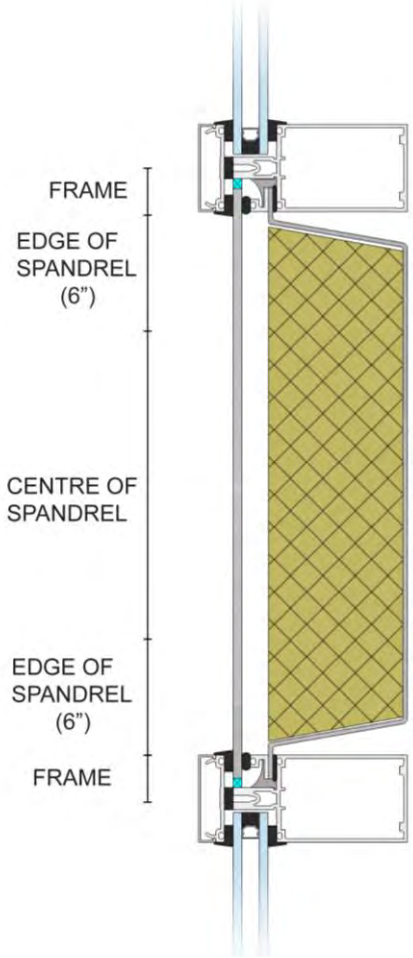

Arrangement 1 - Uninterrupted Spandrel

→ Minimum of 4 cross sections (if symmetrical)

→ Height: 1200mm

→ Width: 2000mm

→ Edge: 152.4mm (6”)

→ A center of panel (1D or 2D model)

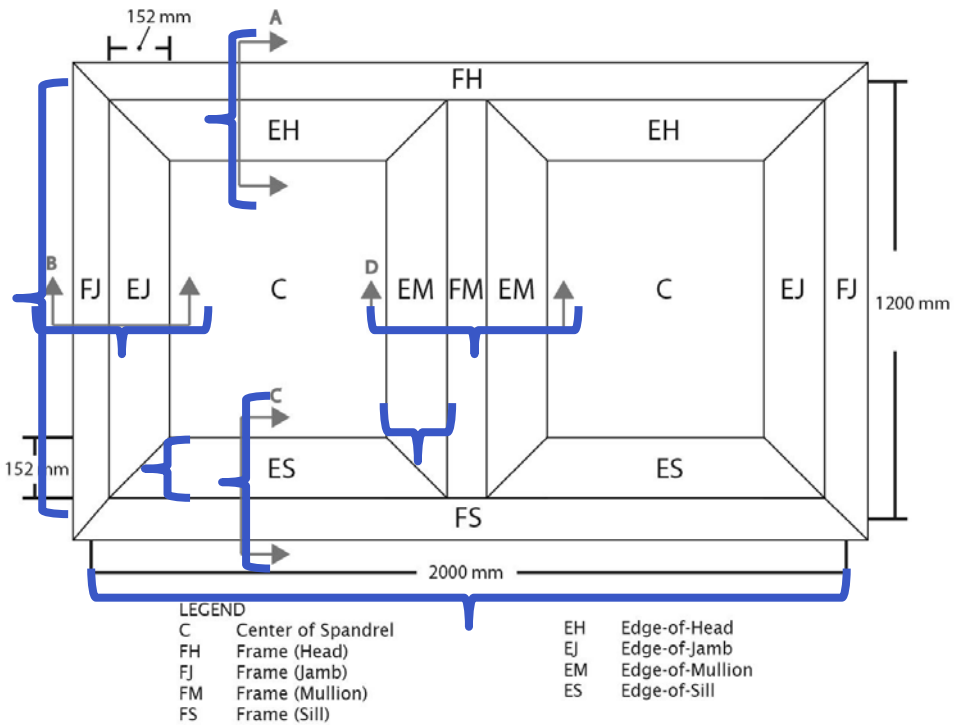

1D vs. 2D Center of Panel

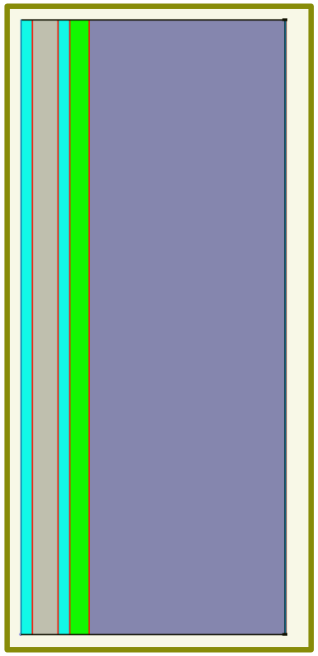

Methodology	U_{SI}-Factor (W/m^2K)	U_{IP}-Factor ($Btu/hr \cdot ft^2 \cdot {}^oF$)
WINDOW (1D)	0.265	0.0467
THERM (2D)	0.268	0.0472
% Difference	1.1%	

Arrangement 2 – Partially Interrupted

→ Spandrel panel insulation is interrupted at a floor slab

→ Model to include concrete slab extending 1 m

→ Edge of sill measured from point of interruption

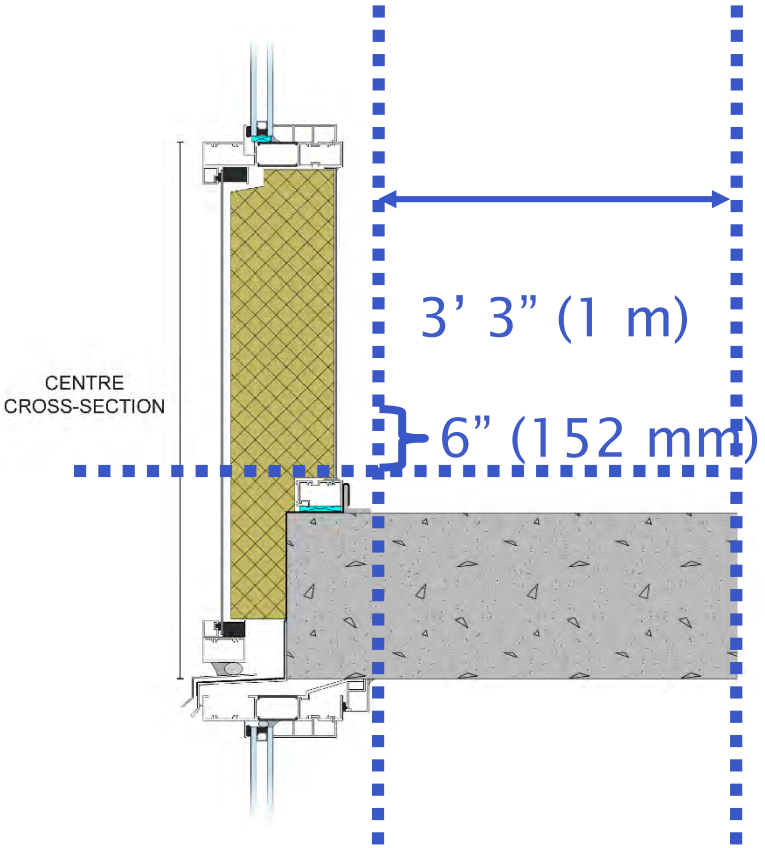

Arrangement 2 – Partially Interrupted

→ Minimum of 5 models (if symmetrical)

→ Full cross section

→ Remainder of the cross sectional areas are similar with additional cross section at the slab

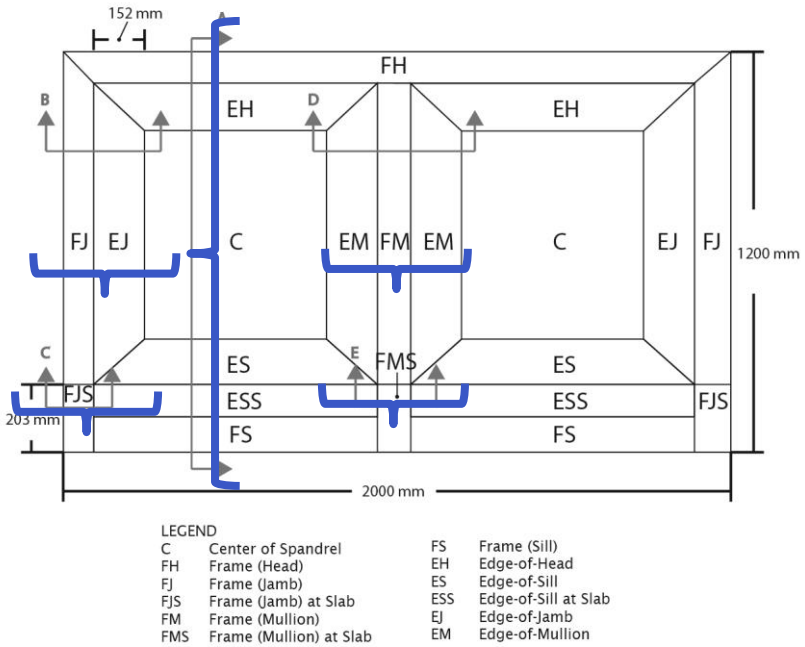

Arrangement 2 – U-Factor Tags

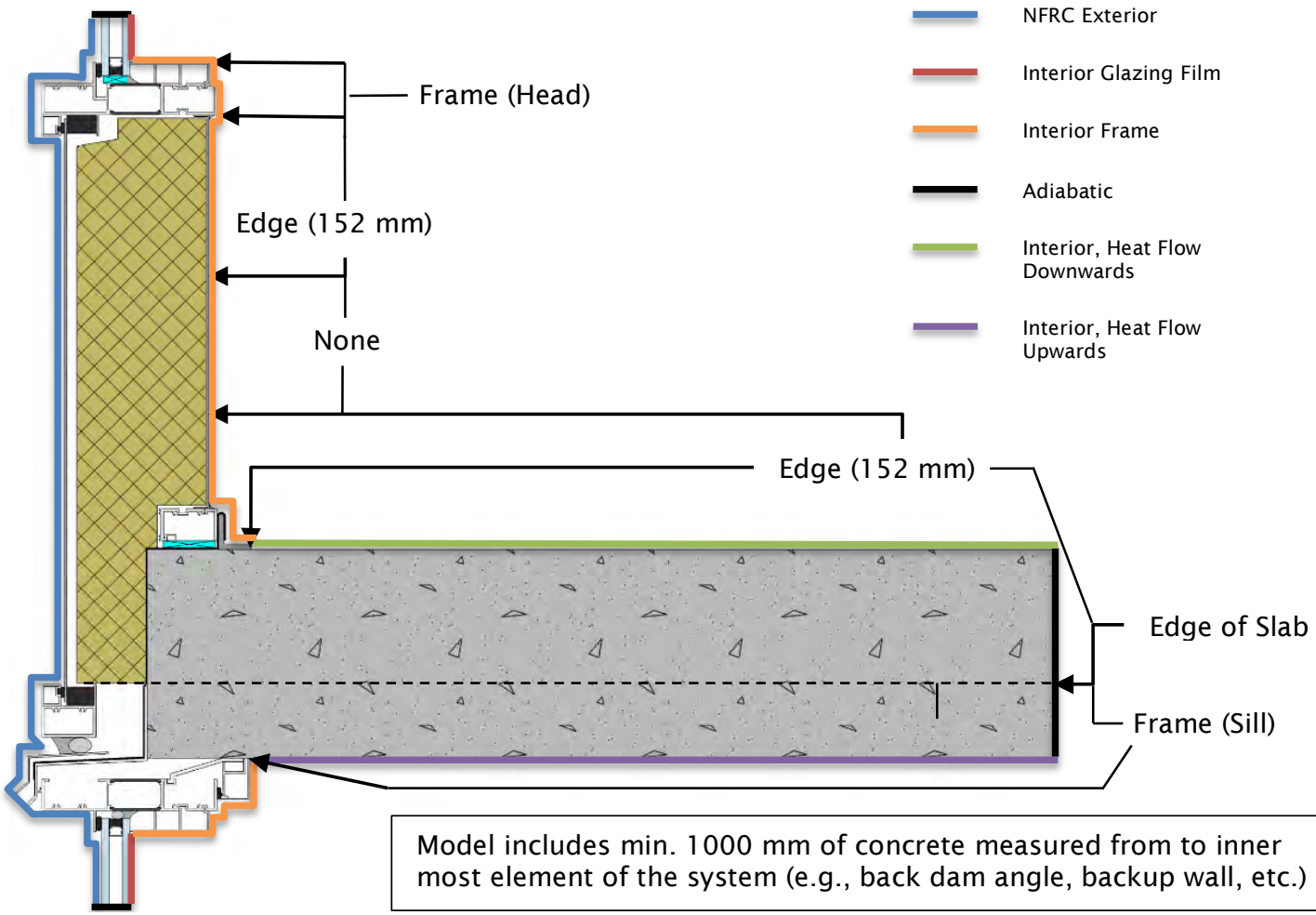

Model includes min. 1000 mm of concrete measured from to inner most element of the system (e.g., back dam angle, backup wall, etc.)

Arrangement 3 – Completely Interrupted

→ Completely interrupted spandrel panel

→ High frame to panel ratio

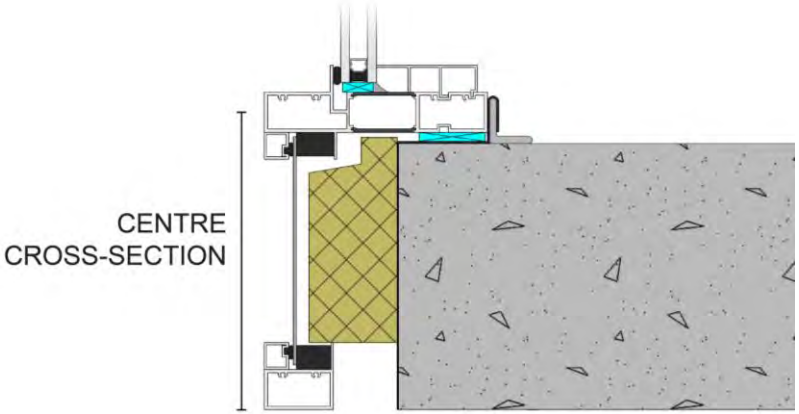

Arrangement 3 – Completely Interrupted

→ Minimum of 3 models (if symmetrical)

→ Height: 203mm + ½ Frame

→ Width: 2000mm

→ Edge: n/a

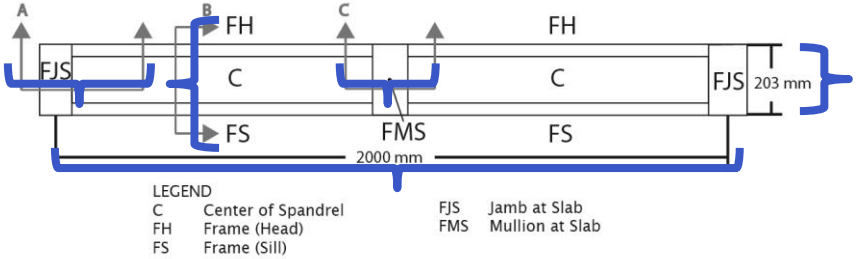

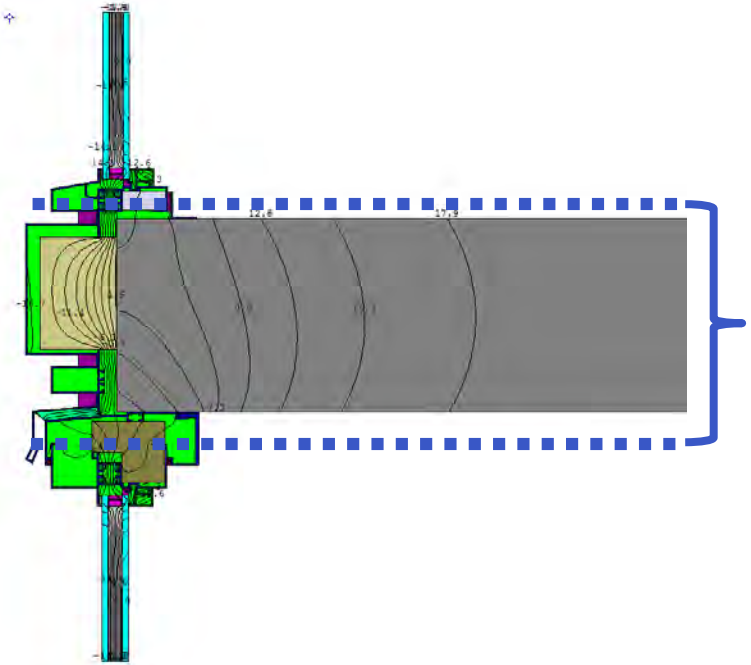

U-Factor vs. Edge Distance Validation (Example)

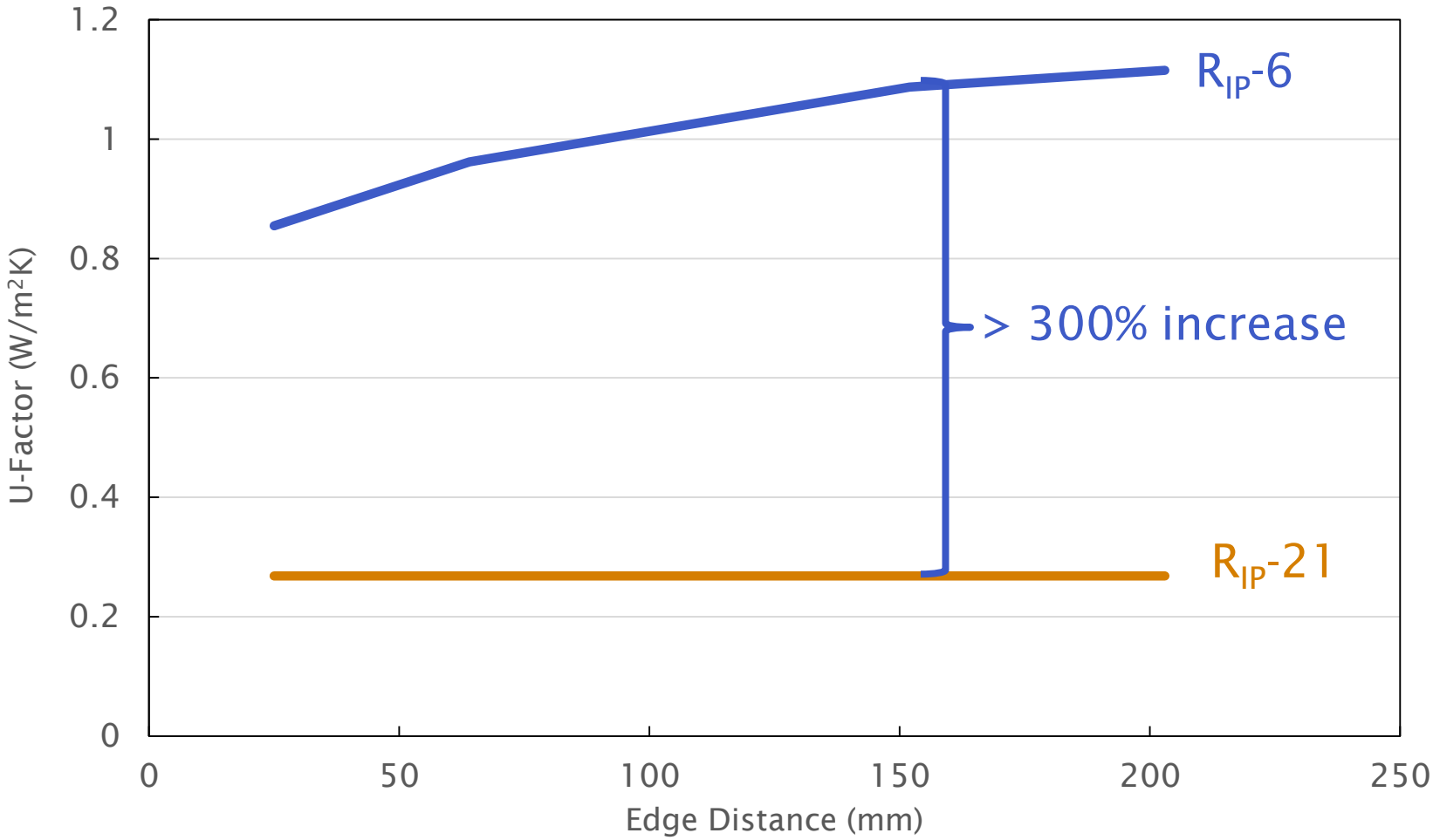

U-Factor vs. Edge Distance Validation (Example)

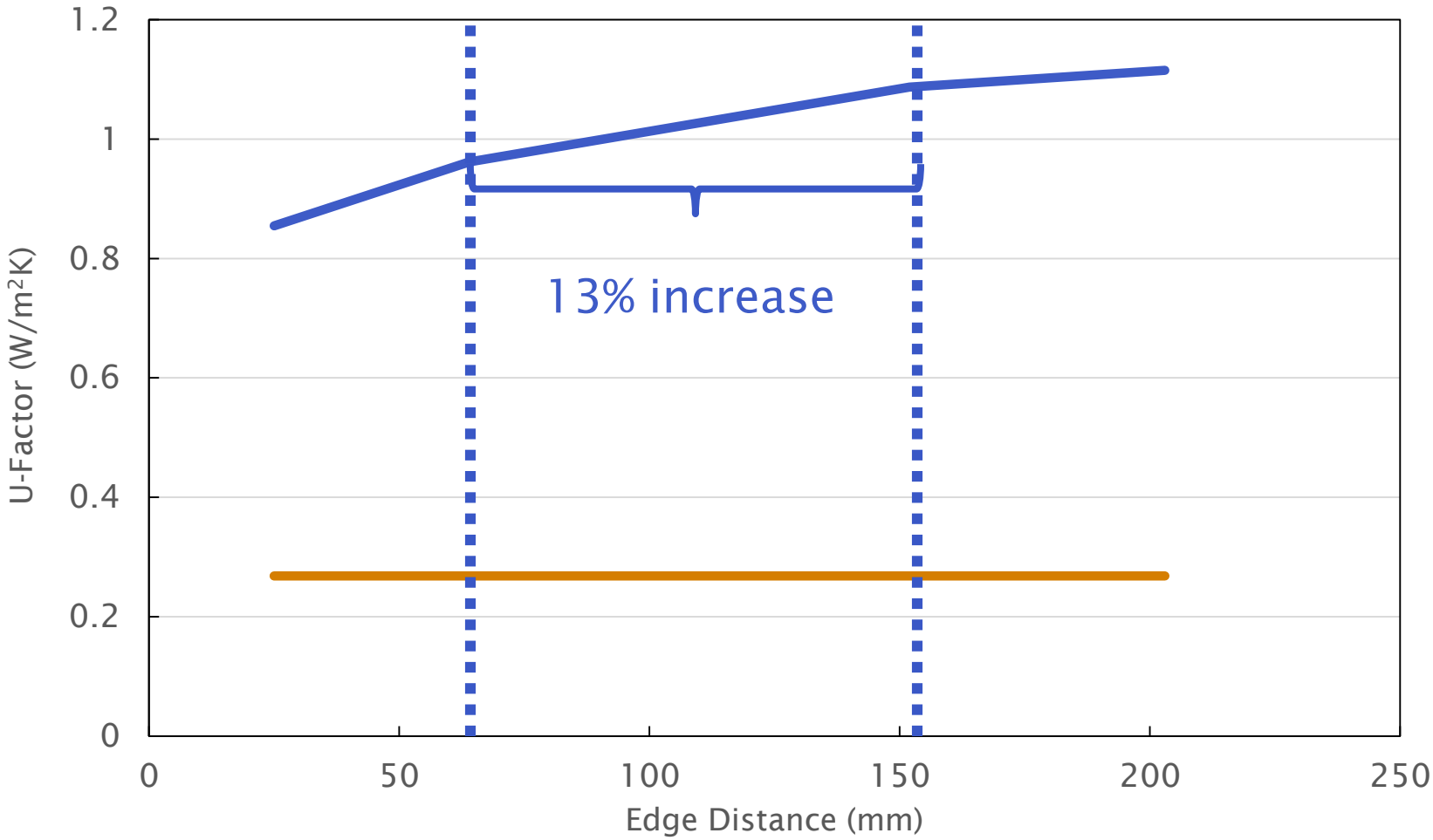

U-Factor vs. Edge Distance Validation (Example)

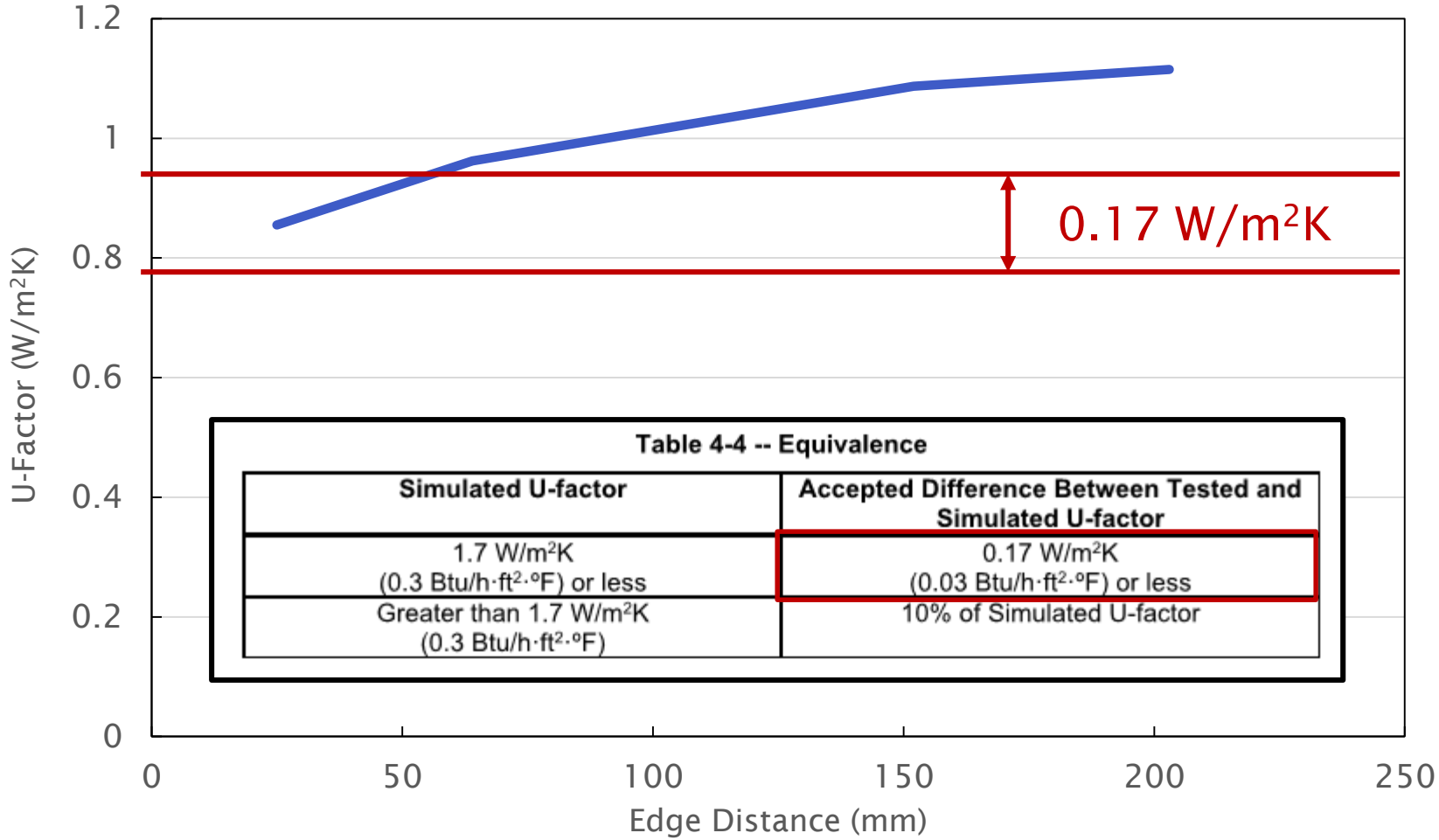

Table 4-4 -- Equivalence

Simulated U-factor	Accepted Difference Between Tested and Simulated U-factor
1.7 W/m²K (0.3 Btu/h·ft²·°F) or less	0.17 W/m²K (0.03 Btu/h·ft²·°F) or less
Greater than 1.7 W/m²K (0.3 Btu/h·ft²·°F)	10% of Simulated U-factor

U-Factor vs. Edge Distance Validation (Example)

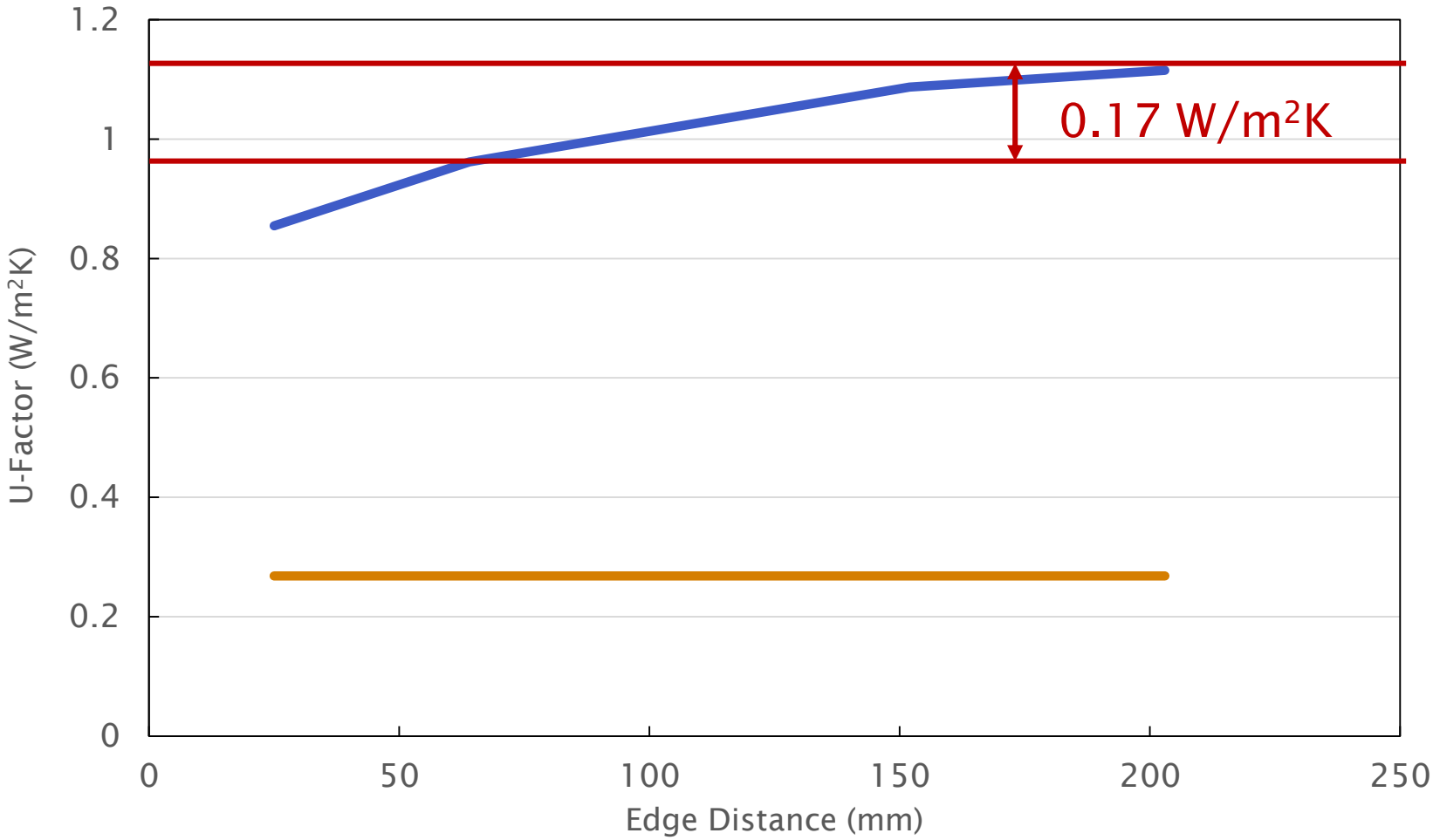

Reference Procedure

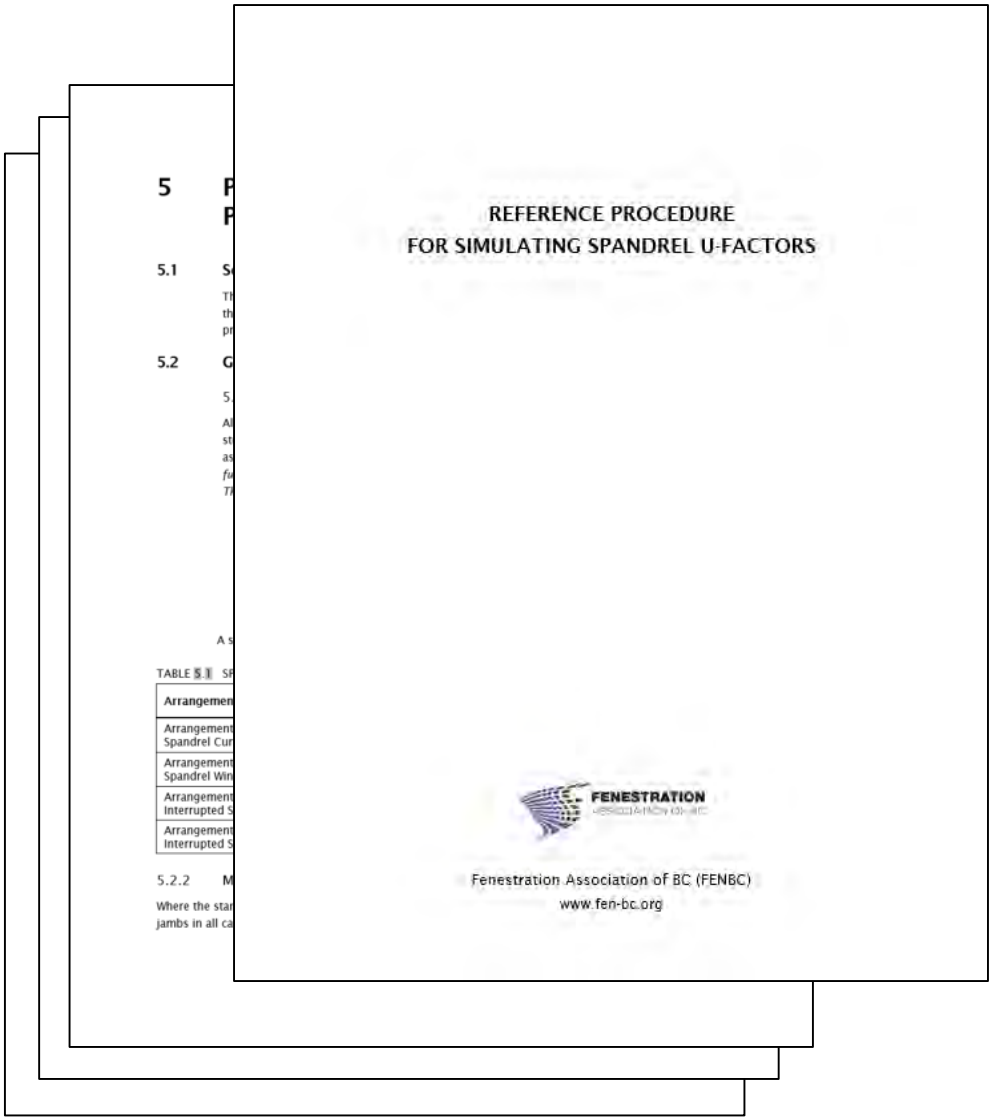

Calculation Tool

	User Input	Default
Default Dimensions?	No	
System Type	Curtain Wall	
Symmetrical?	Yes	Yes
Height (mm)	1200	1200
Width (mm)	2000	2000

User Input	Symmetry
Calculated	

NO ERRORS DETECTED

Frame Width (mm)	Left		Right	
Head	88.9	127.0	88.9	127.0
Sill	88.9	127.0	88.9	127.0
Jamb	88.9	127.0	88.9	127.0
	Top/Bottom		Left/Right	
Edge Width	152.4	152.4	152.4	152.4
Full	555.6		455.6	

Component	Area [m²]	U-Value [W/m²K]	U-Value Btu/ft²hrF	R-Value ft²hrF/Btu	A x U
FH	0.087	3.35	0.589	1.70	0.29
FJ	0.103	3.20	0.563	1.78	0.33
FS	0.087	3.19	0.563	1.78	0.28
FM	0.099	3.00	0.528	1.89	0.30
EH	0.231	0.58	0.103	9.75	0.13
EM	0.292	0.61	0.107	9.31	0.18
ES	0.231	0.58	0.103	9.75	0.13
EJ	0.292	0.61	0.107	9.31	0.18
C	0.978	0.27	0.047	21.16	0.26
Totals:	**2.40**				**2.08**
Checksum	2.40				

Effective U-Value =	**0.867**	**W/m²K**	**Spandrel to Frame Ratio (SFR)**	**84%**
Effective RSI =	**1.15**	**m²K/W**	**SFR (No center mullion)**	**88%**
Effective U-Value =	**0.153**	**Btu/ft²hrF**		
Effective R-Value =	**6.55**	**ft²hrF/Btu**		

ERROR CHECKS	
Overall Width	OKAY
Overall Height	OKAY
Center of Panel Width	OKAY
Center of Panel Height	OKAY
Sum of Areas	OKAY
U-values	OKAY
Edge Distance	OKAY

Dimensions for Area Takeoff (UxA)

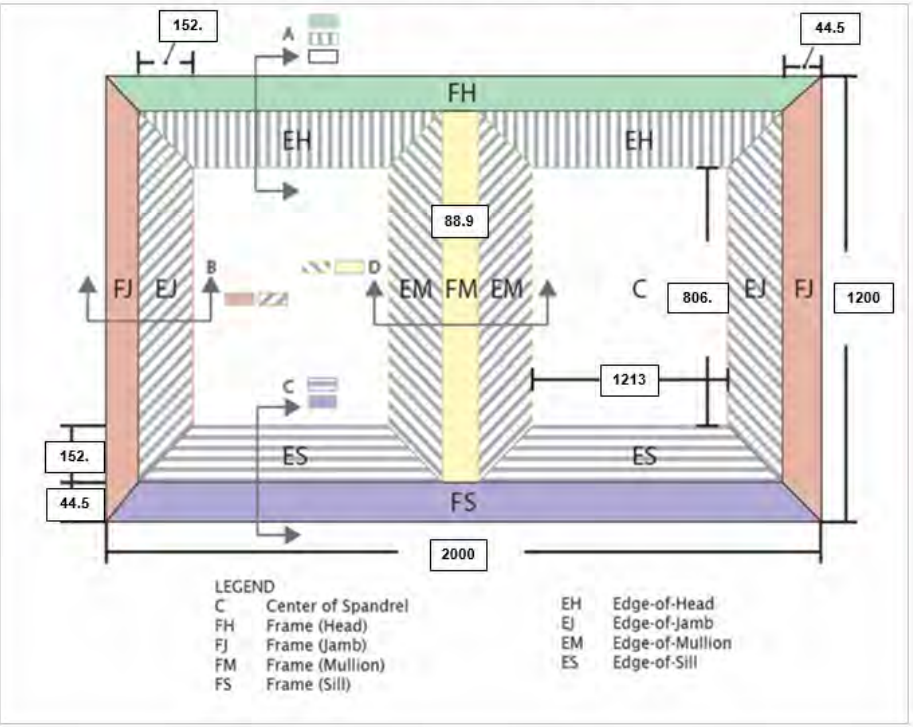

Available Online

FENESTRATION ASSOCIATION OF BC

The Association For Modern Glass, Glazing, Windows & Doors

Google Custom Search

Home | About Us | News & Events | Membership | Education & Careers | Resources | Contact Us

- Publications & Materials
- Reference Procedure for Simulating Spandrel U-Factors
- Technical Documents
- Useful Industry Links

Reference Procedure for Simulating Spandrel U-Factors

A PUBLIC RESOURCE PREPARED FOR THE FENESTRATION ASSOCIATION OF BC (FENBC) WITH THE FINANCIAL SUPPORT OF BC HOUSING UNDER THE BUILDING EXCELLENCE RESEARCH AND EDUCATION GRANTS PROGRAM

Energy design standards such as ASHRAE 90.1 and the Canadian National Energy Code for Buildings (NECB) require building designers to determine effective U-factors (U-values) for all enclosure assemblies. In these standards, spandrel assemblies utilizing fenestration products are considered to be opaque walls, not fenestration products.

Design standards such as ASHRAE 90.1 and NECB require building designers to determine the effective U-factor of opaque wall assemblies clad with spandrel products. **The Reference Procedure for Simulating Spandrel Panel U-Factors** was created to allow spandrel U-factor performance claims to be objectively evaluated in a similar way as window U-factor performance claims that are based on NFRC 100 procedures.

While various methods are currently employed to determine spandrel U-factors, including physical testing, 2D simulation and 3D thermal modeling, the lack of a "standard" reference methodology makes it difficult for project teams to evaluate or compare performance claims from product suppliers.

As the spandrel products used today often have significantly higher thermal transmittance than fenestration products, use of a recognized reference methodology that produces consistent and comparable results can help project teams to make better-informed choices about spandrel products.

Download the Reference Procedure, User Guide + Calculation Tool

http://www.fen-bc.org/content/view/resources-spandrel

Next Steps

→ Proposed methodology does not capture everything

- → Deflection headers
- → Adjacent systems
- → Etc.,

→ But it does

- → Provide a consistent & comparable method
- → More accurately reflects typical spandrel arrangements

Discussion + Questions

FOR FURTHER INFORMATION PLEASE VISIT

→ www.rdh.com

→ www.buildingsciencelabs.com

OR CONTACT US AT

→ dhaaland@rdh.com

RDH BUILDING SCIENCE