CCBST 2017

Dynamic Effect of Thermal Bridges on the Energy Demand of Residential Buildings in British Columbia

Fuad Baba, Ph.D Student
Hua Ge, Ph.D., P. Eng.
Dept. of Building, Civil and Environmental Engineering, Concordia University
fuadbaba_15@hotmail.com; hua.ge@concordia.ca

07/11/2017

UNIVERSITÉ Concordia UNIVERSITY

Outline

- Introduction
- Objectives
- Methodology
- Results
- Conclusions

Introduction

Energy Consumption in Canada

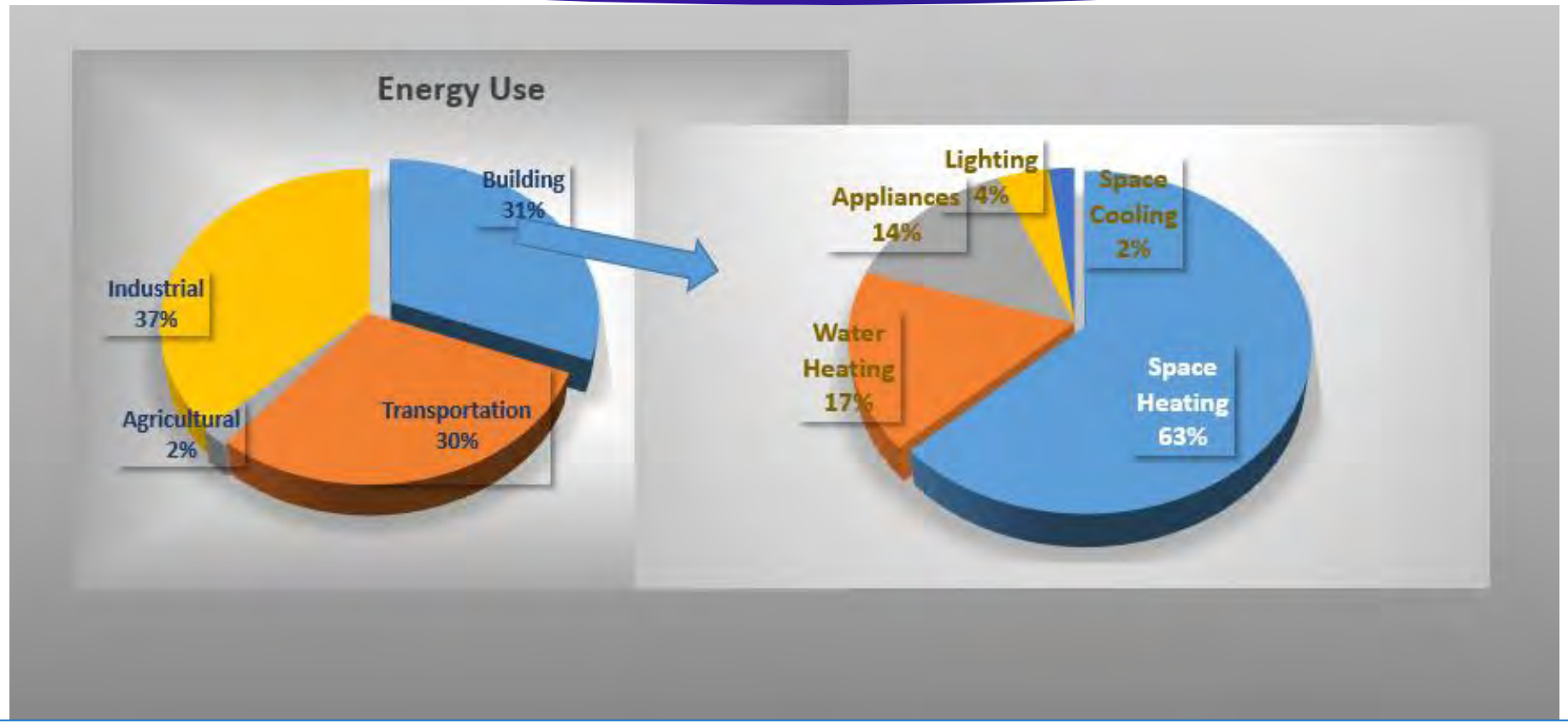

Introduction

BC Energy Step Code

Introduction

Thermal Bridging

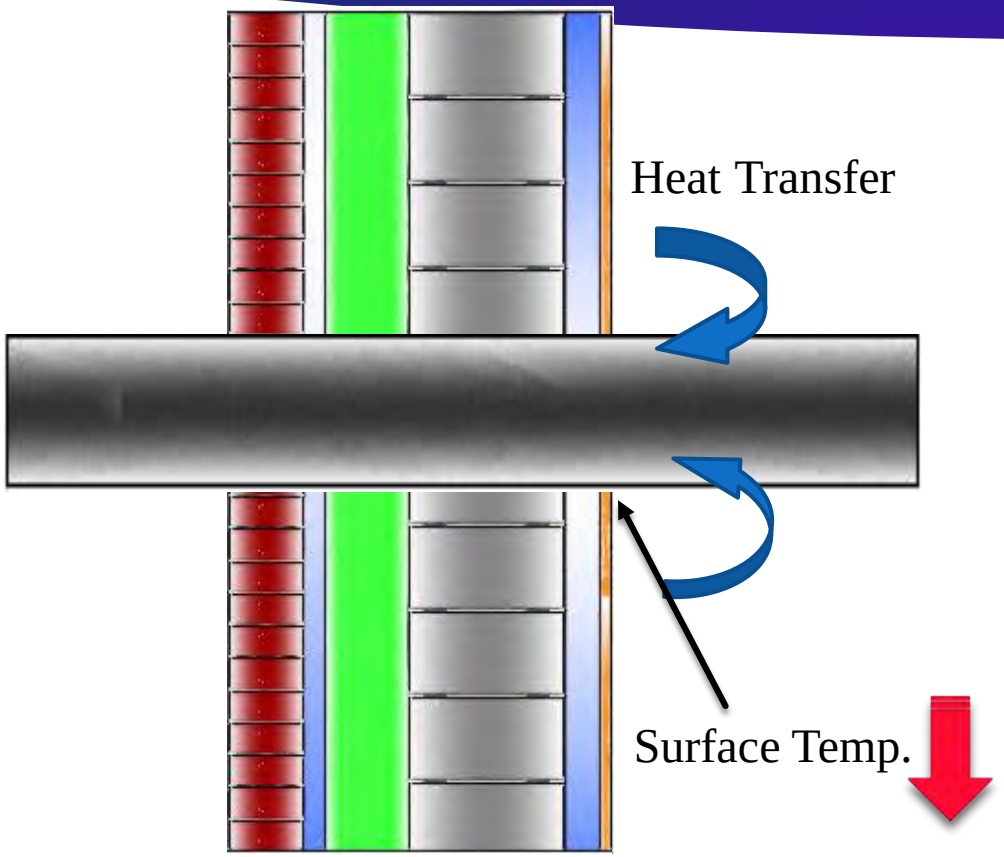

Building standards and codes :

- European Standard EN ISO 10211 and EN ISO 14683,
- ASHRAE 90.1 and 1365-RP ,
- The Canadian building codes

Introduction

Steady State method

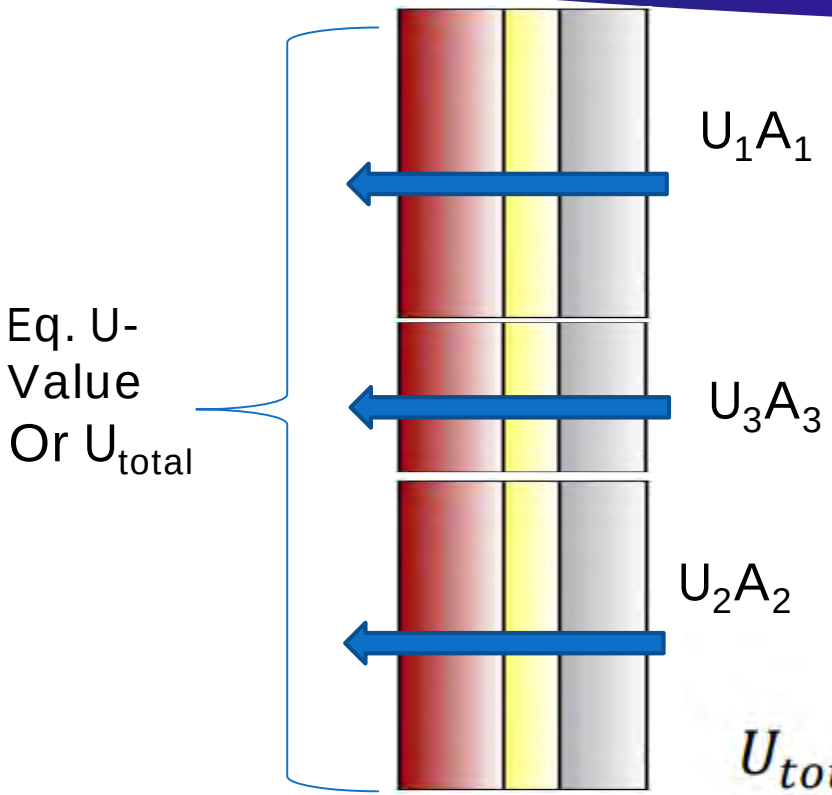

Equivalent U-value method

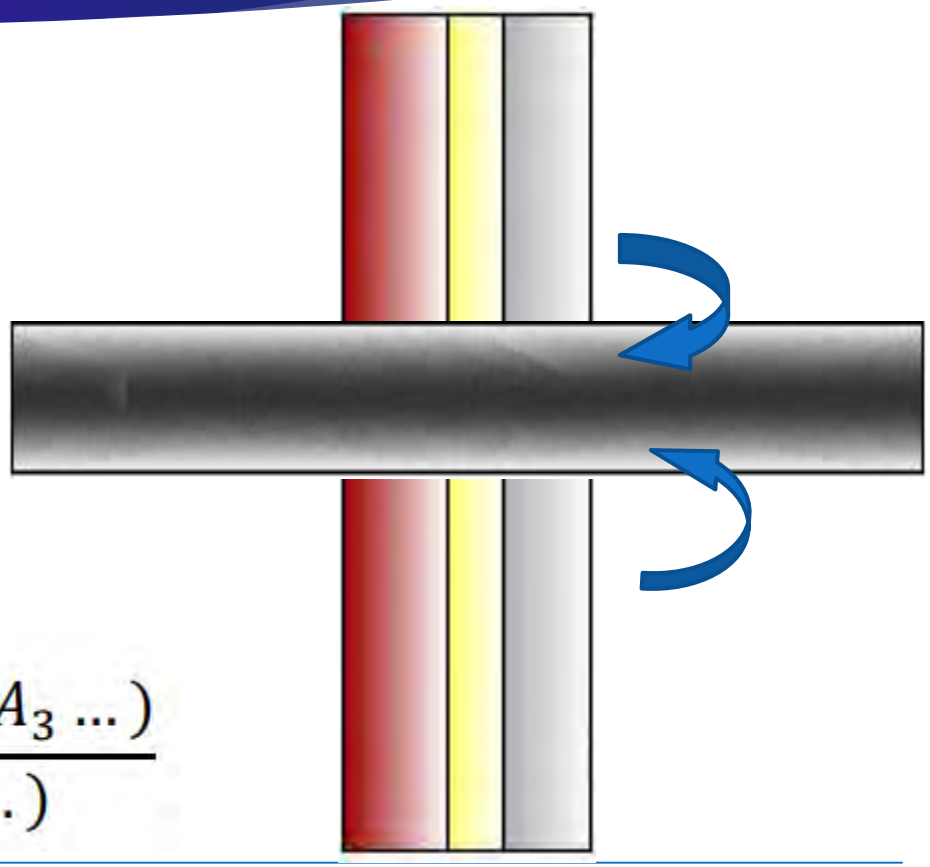

$$U_{total} = \frac{(U_1A_1 + U_2A_2 + U_3A_3 \ldots)}{(A_1 + A_2 + A_3 \ldots)}$$

Introduction

Steady State method

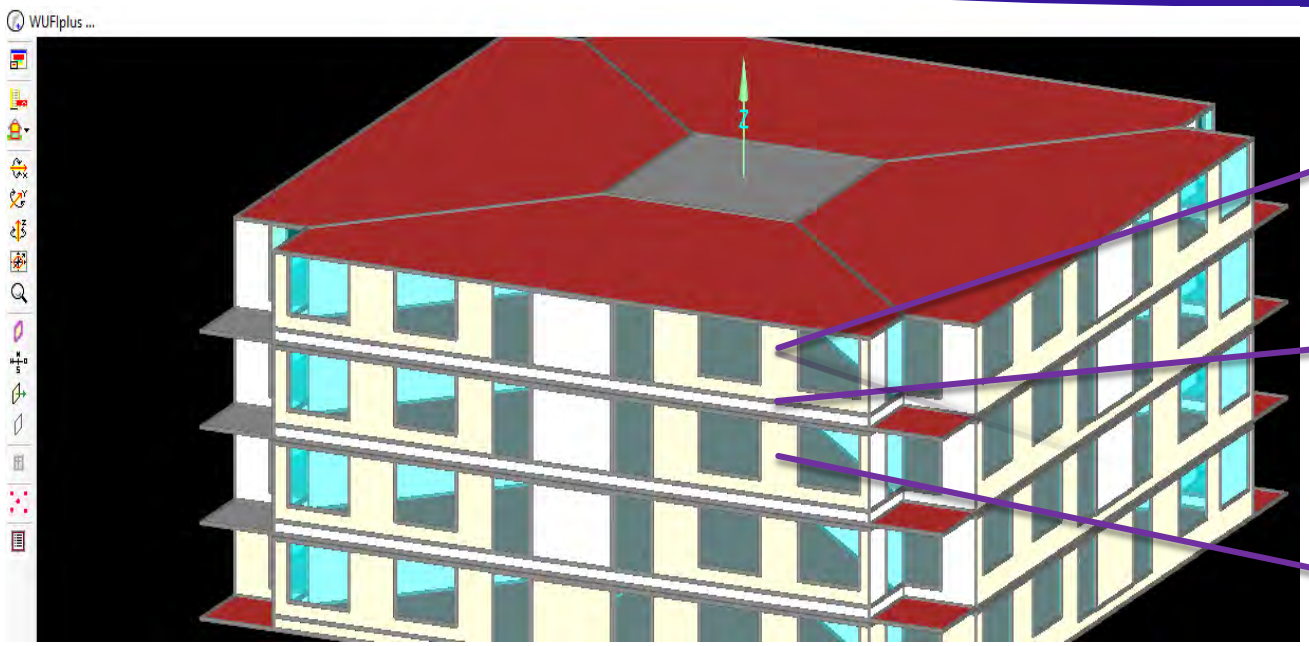

Whole Energy Building programs

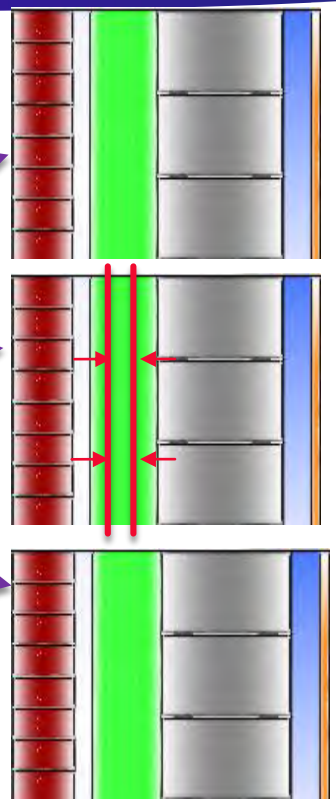

1D Wall

Subsurface with Eq. U-value

1D Wall

Modelling wall

Introduction

Steady State method

Whole Energy Building programs

DesignBuilder - single house.dsb - Construction - Site, Building 1

Linear Thermal Bridging at Junctions

☑ Specify Psi Values

Psi Values Involving Metal Cladding	
Roof-Wall (W/m-K)	0.420
Wall-Ground floor (W/m-K)	1.730
Wall-Wall (corner) (W/m-K)	0.380
Wall-Floor (not ground floor) (W/m-K)	0.040
Lintel above window or door (W/m-K)	1.910
Sill below window (W/m-K)	1.910
Jamb at window or door (W/m-K)	1.910

Psi Values NOT Involving Metal Cladding	
Roof-Wall (W/m-K)	0.180
Wall-Ground floor (W/m-K)	0.240
Wall-Wall (corner) (W/m-K)	0.140
Wall-Floor (not ground floor) (W/m-K)	0.110
Lintel above window or door (W/m-K)	0.450
Sill below window (W/m-K)	0.080
Jamb at window or door (W/m-K)	0.090

Introduction

E. Kossecka and J. Kosny

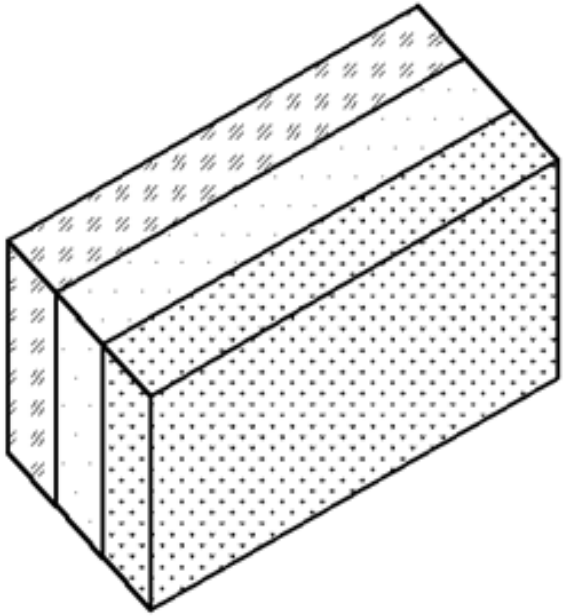

Equivalent wall method

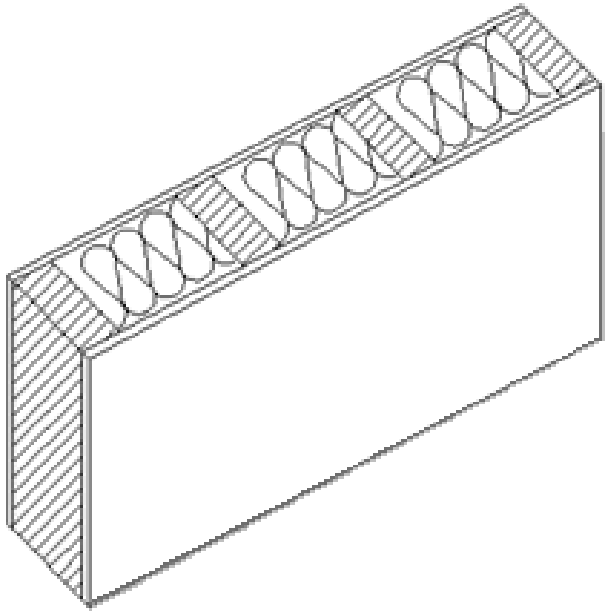

$$\frac{\partial}{\partial x}\left(k\frac{\partial T}{\partial x}\right)+\frac{\partial}{\partial y}\left(k\frac{\partial T}{\partial y}\right)+\frac{\partial}{\partial z}\left(k\frac{\partial T}{\partial z}\right)+\dot{q}=\rho c_p\frac{\partial T}{\partial t}$$

Net transfer of thermal energy into the control volume (inflow-outflow)

Thermal energy generation

Change in thermal energy storage

Introduction

Dynamic method

Direct 2D/3D Dynamic Modelling

Direct numerical modeling of heat transf
thermal bridges in whole building energy
program

Including the dynamic thermal characte
(Heat Capacity and Density)

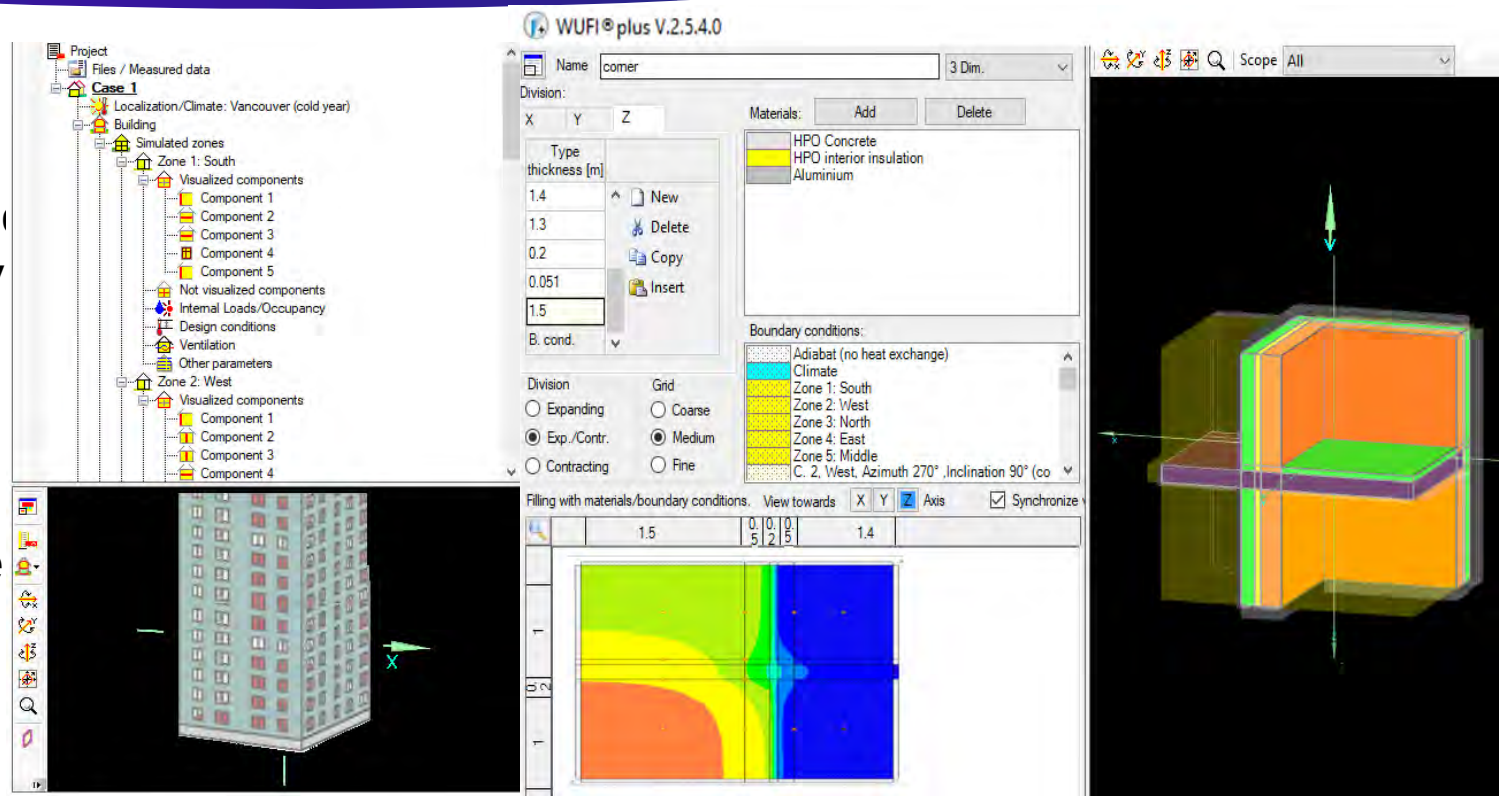

Objectives

1. To investigate the dynamic effect of thermal bridges on the energy performance of a multi-unit residential building under BC's climates

2. To quantify the difference in predicting the energy demand between the commonly used equivalent U-value method and direct dynamic 3D modeling

How significant it would be?

Methodology

Case Study and Thermal Bridges

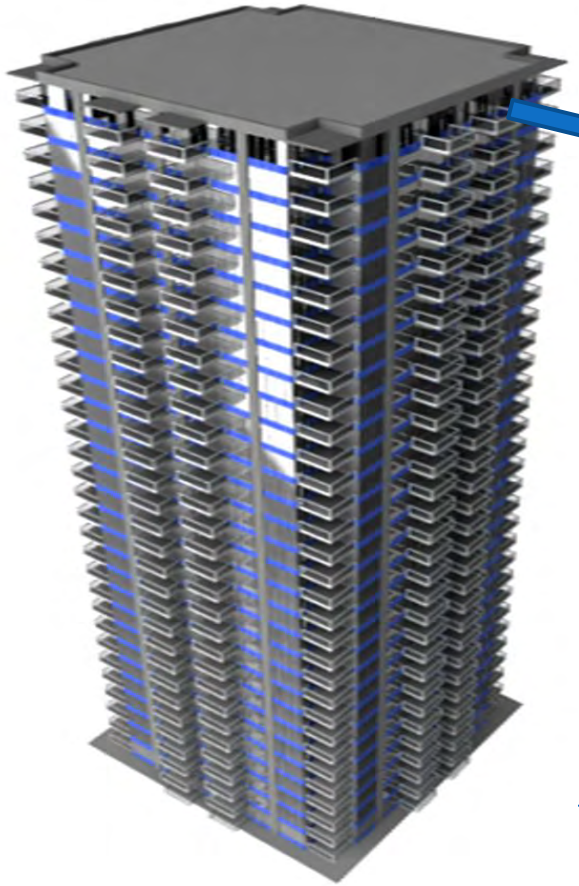

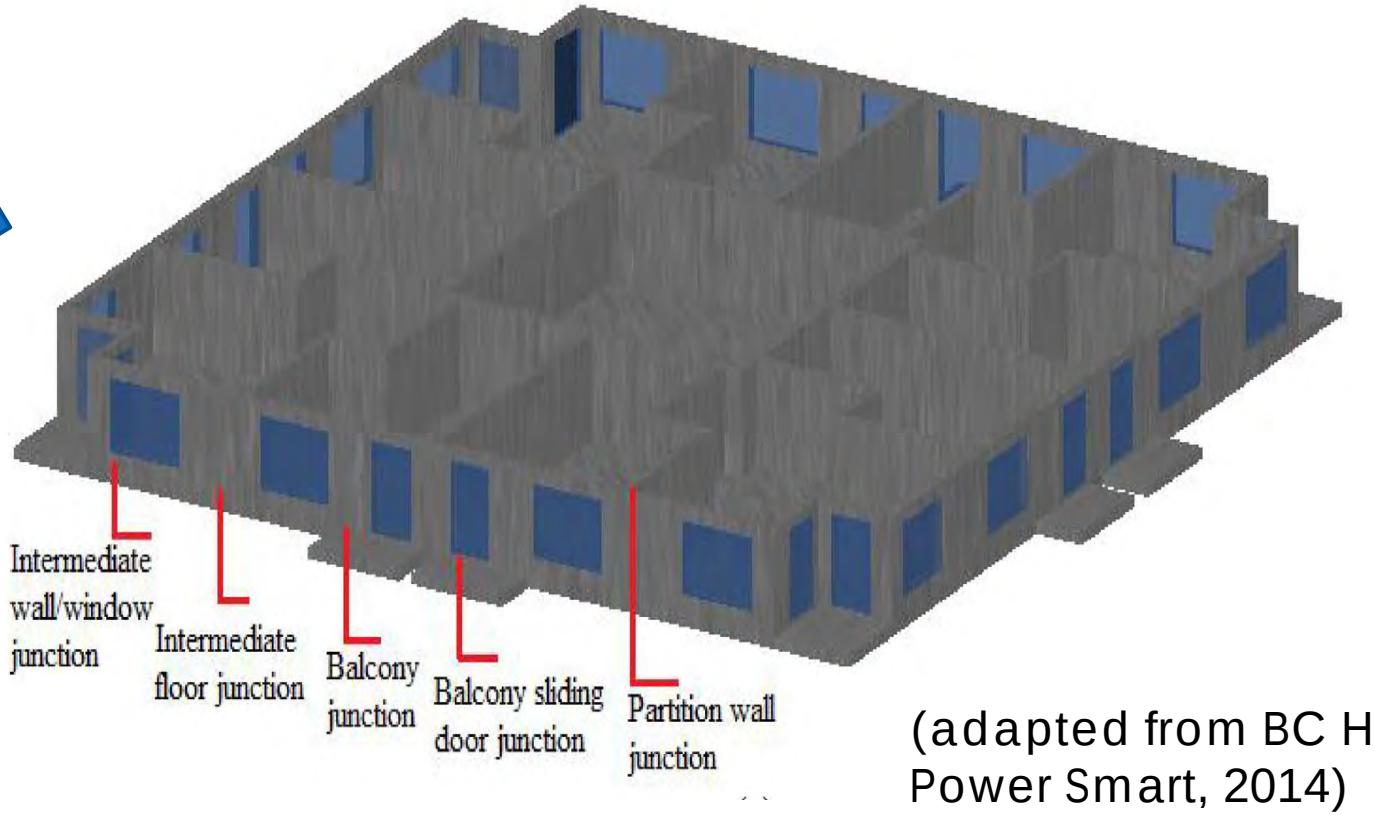

(adapted from BC Hydro Power Smart, 2014)

Methodology
Thermal Bridges

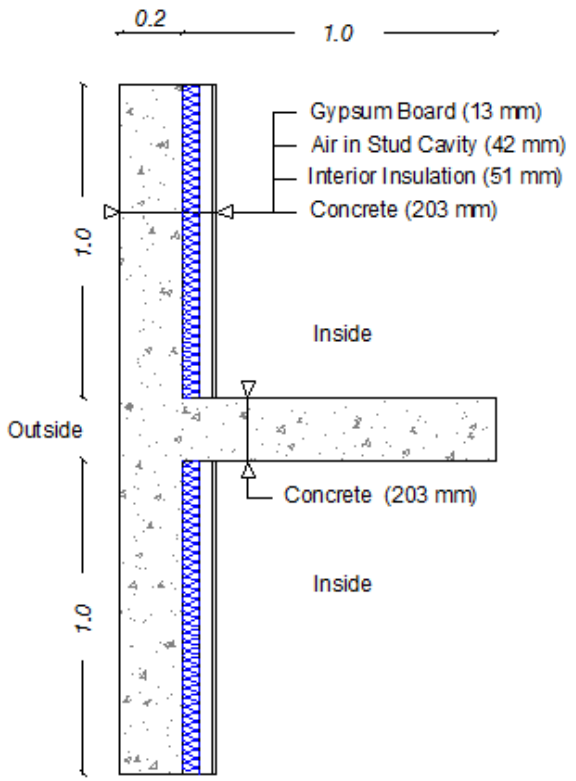

Intermediate floor junction

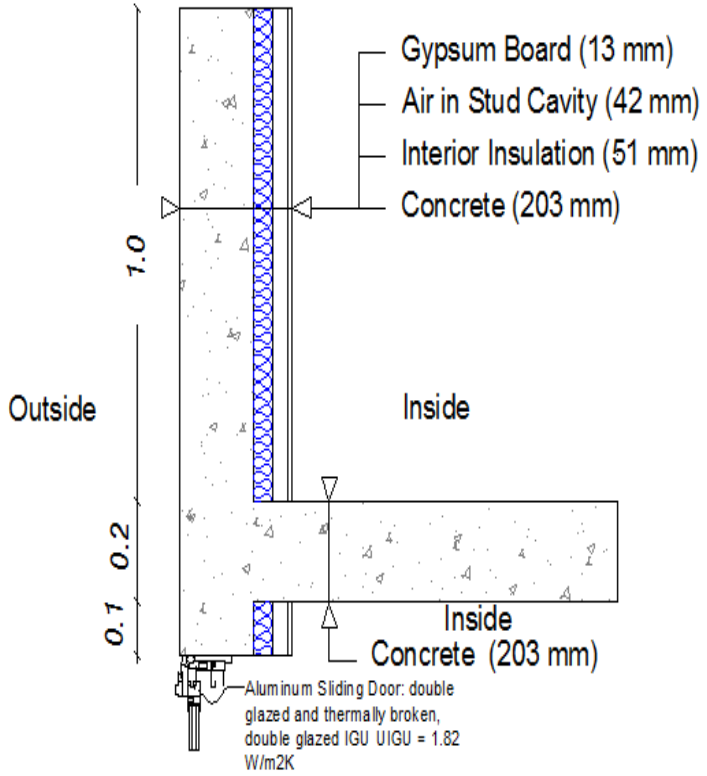

Intermediate window/wall junction

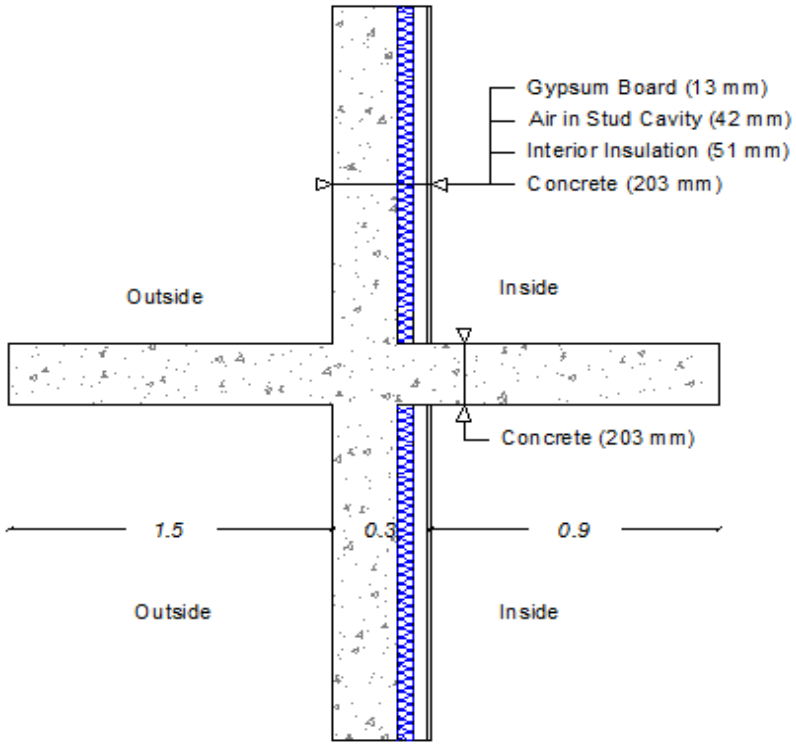

Balcony junction

Methodology
Thermal Bridges

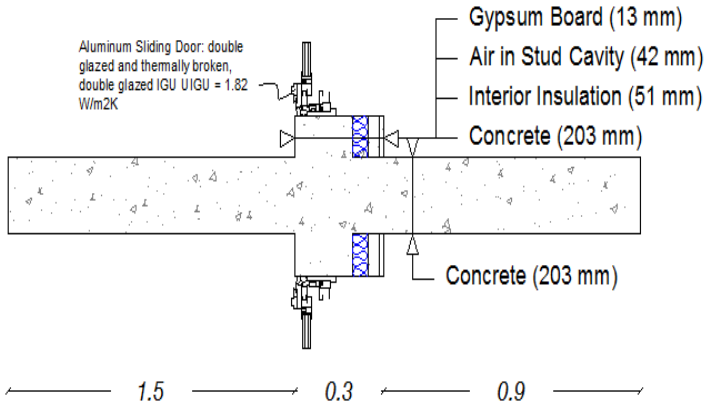

Balcony/sliding door junction

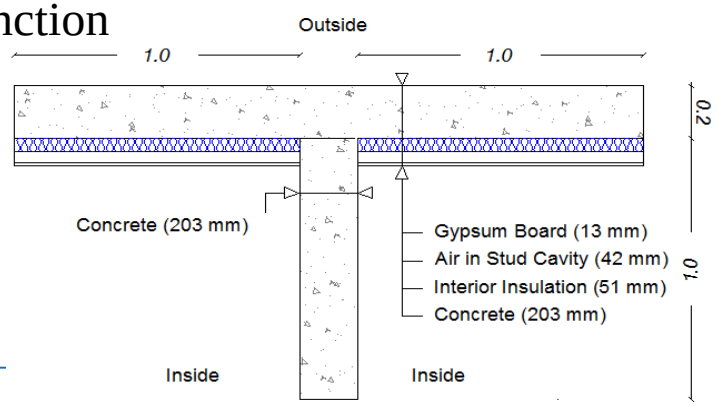

Partition wall junction (plan view)

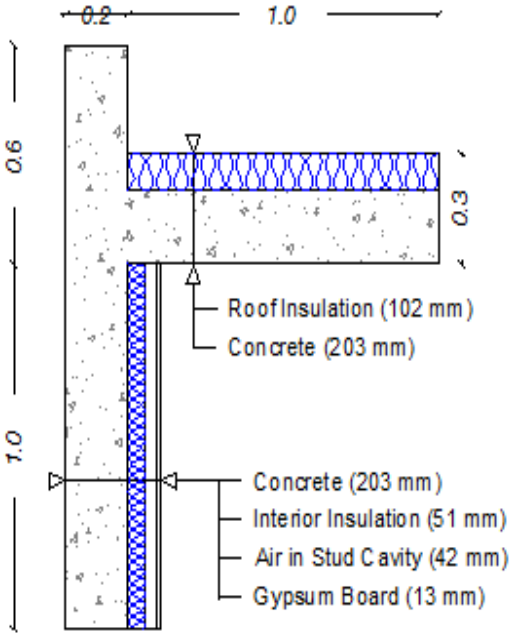

Roof/wall junction

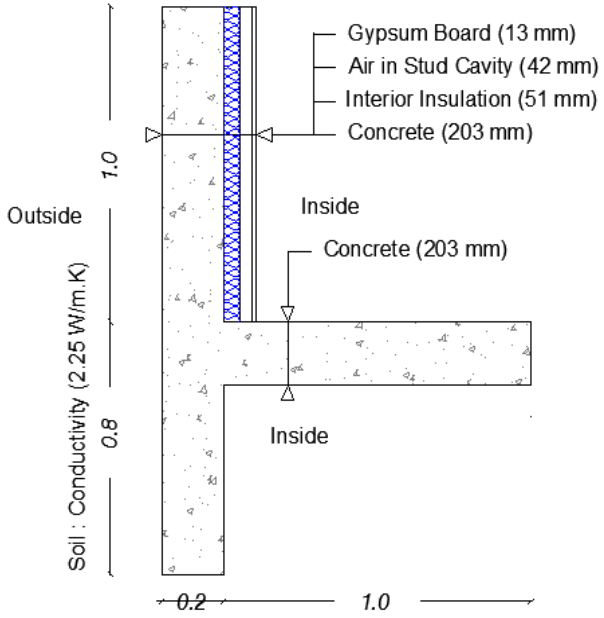

Below-grade wall junction

Methodology

Construction Types

Pour-in-Place Concrete

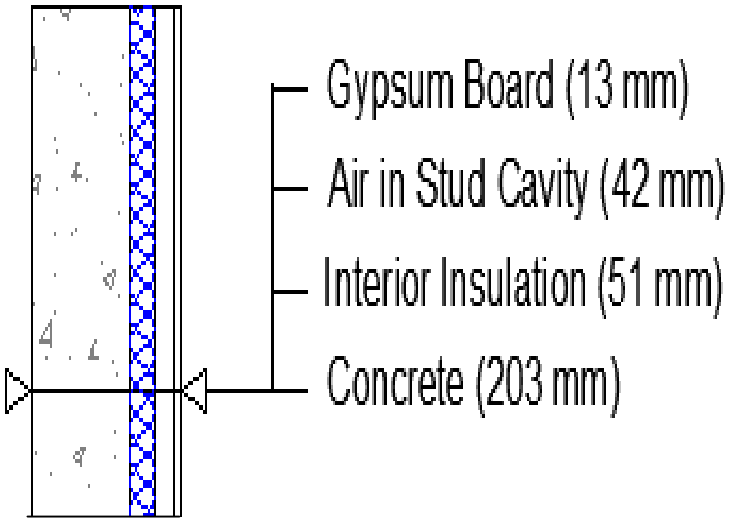

Brick Veneer Construction

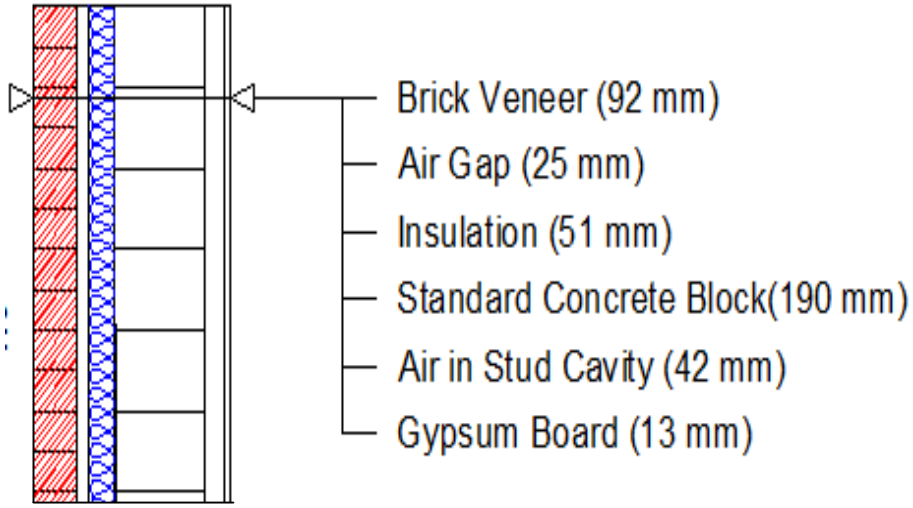

Methodology

Thermal bridge levels

Standard connection details

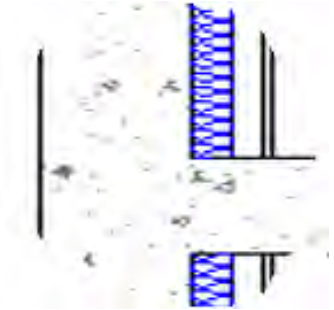

Improved connection details

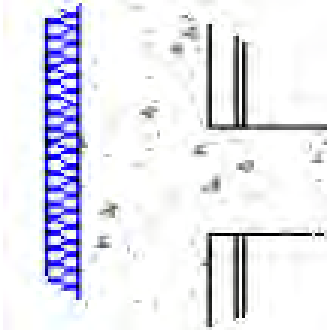

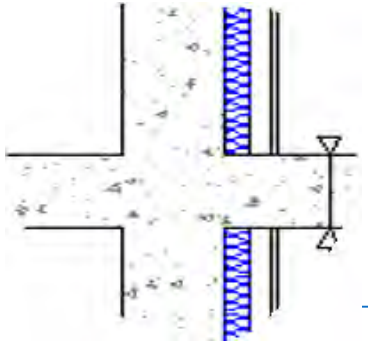

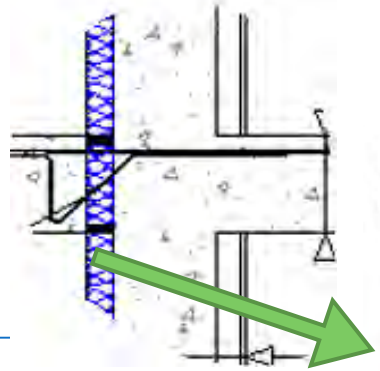

Polystyrene Hard Foam Insulation (80 mm)

Continuous insulation using (Isokorb CM20)

Standard connection details

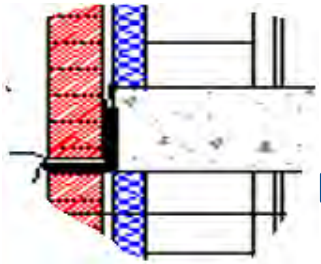

Improved connection details

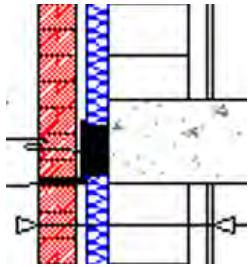

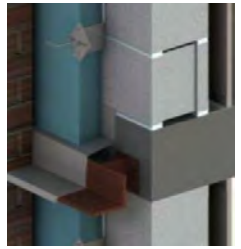

Spaced Shelf Angle

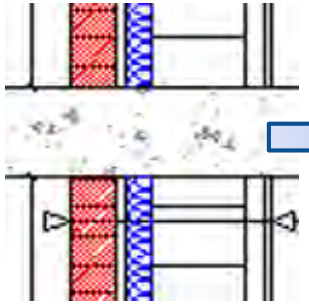

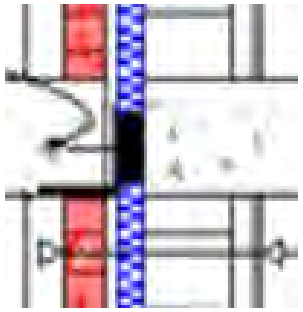

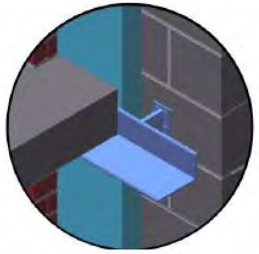

Slab & Brick (Anchored to Slab at 16" o.c.) Support Angle

(adapted from BC Hydro Power Smart, 2014)

Methodology

Climate Zones

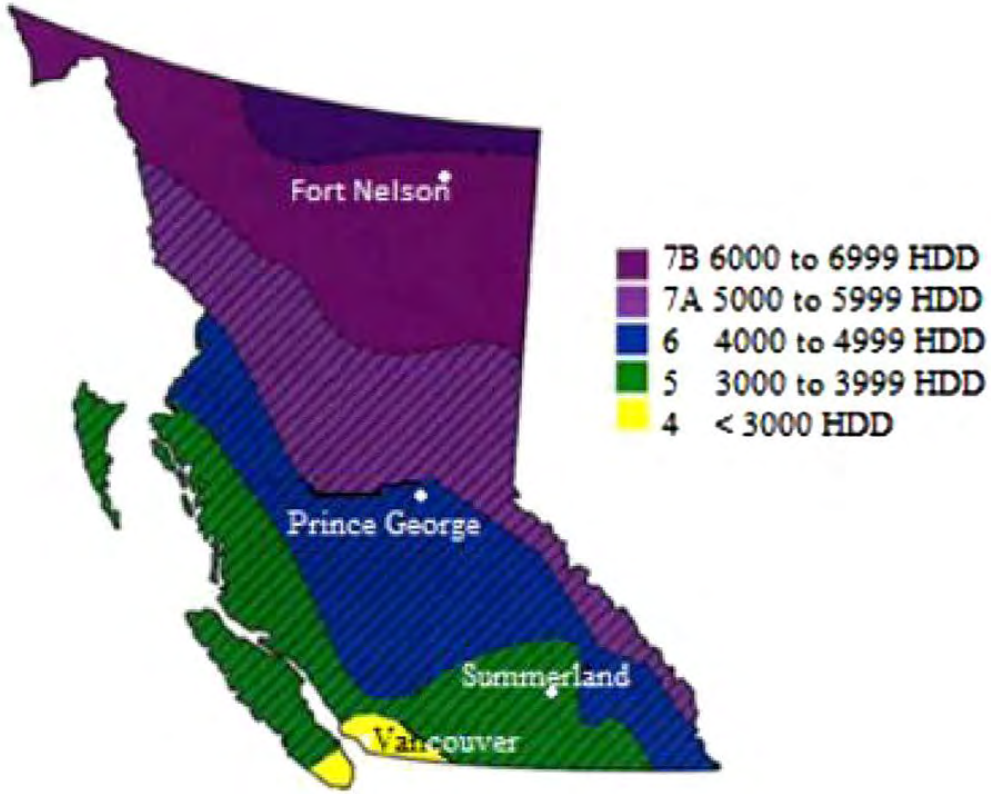

- Four climatic zones:

1. Vancouver (zone 4)
2. Summerland (zone 5)
3. Prince George (zone 6)
4. Fort Nelson (zone 7)

Methodology

Summary of 96 Scenarios

Parameters	
Construction types	• Pour-in-place concrete construction • Brick veneer
Thermal bridge levels	• No thermal bridges • Standard connection details • Improved connection details
Insulation level	• Standard construction meeting building codes • Higher level of insulation
Thermal bridge modeling approaches	• Direct 3D dynamic modeling • Equivalent U-value method
Climates	• Four climatic zones: 1. Vancouver (zone 4) 2. Summerland (zone 5) 3. Prince George (zone 6) 4. Fort Nelson (zone 7)

Methodology

Settings in Whole Building Energy Simulations

	Units	Value	Notes and References
Hourly simulations over one year period are carried out using CWEC weather file			
Occupancy	People/m^2	0.04	Hotel Schedule
Heating Set Point	°C	22	Table G–G schedule (ANSI/ASHRAE/IES Standard, 2010b)
Heating Set Back	°C	18	Table G–G schedule (ANSI/ASHRAE/IES Standard, 2010b)
Lighting Energy	W/m^2	8	Table G–G schedule (ANSI/ASHRAE/IES Standard, 2010b)
Infiltration rate	L/s-m^2	0.25	MH Report

Results and Discussion

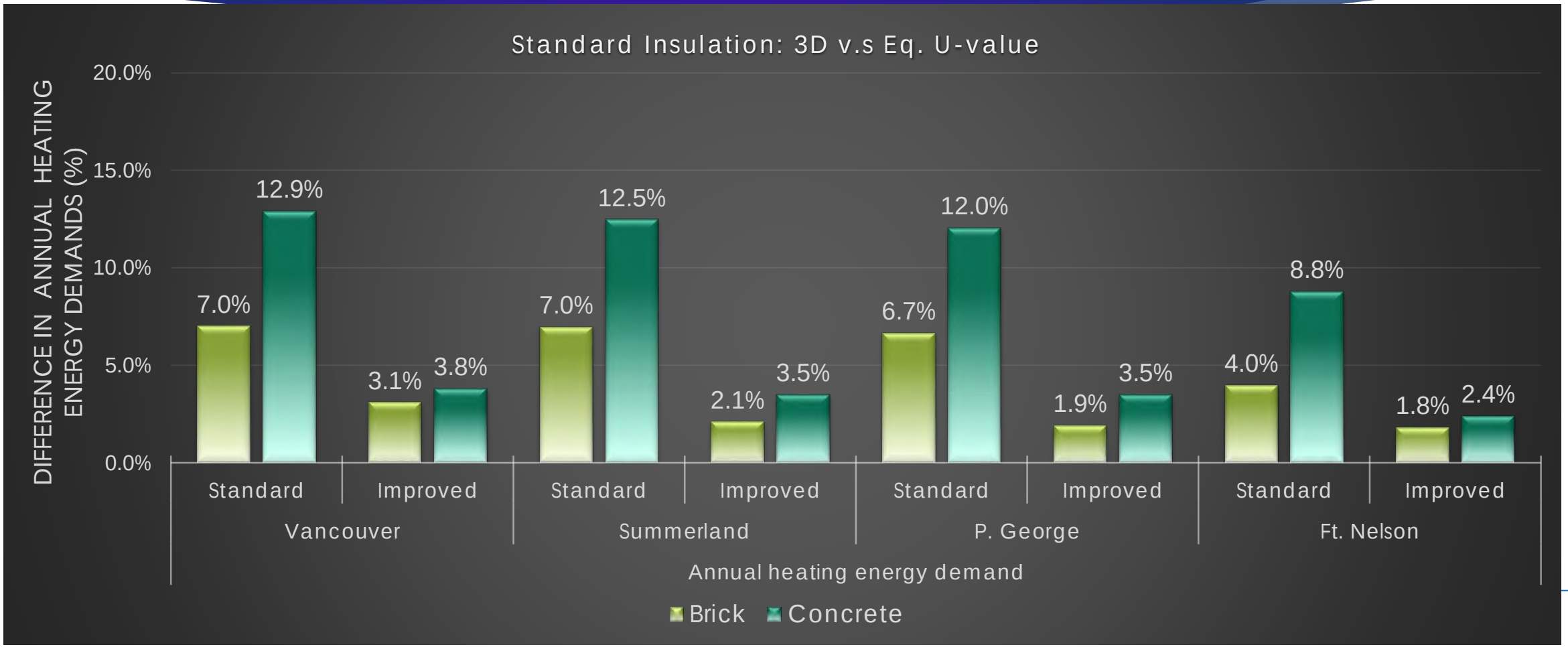

Results and Discussion

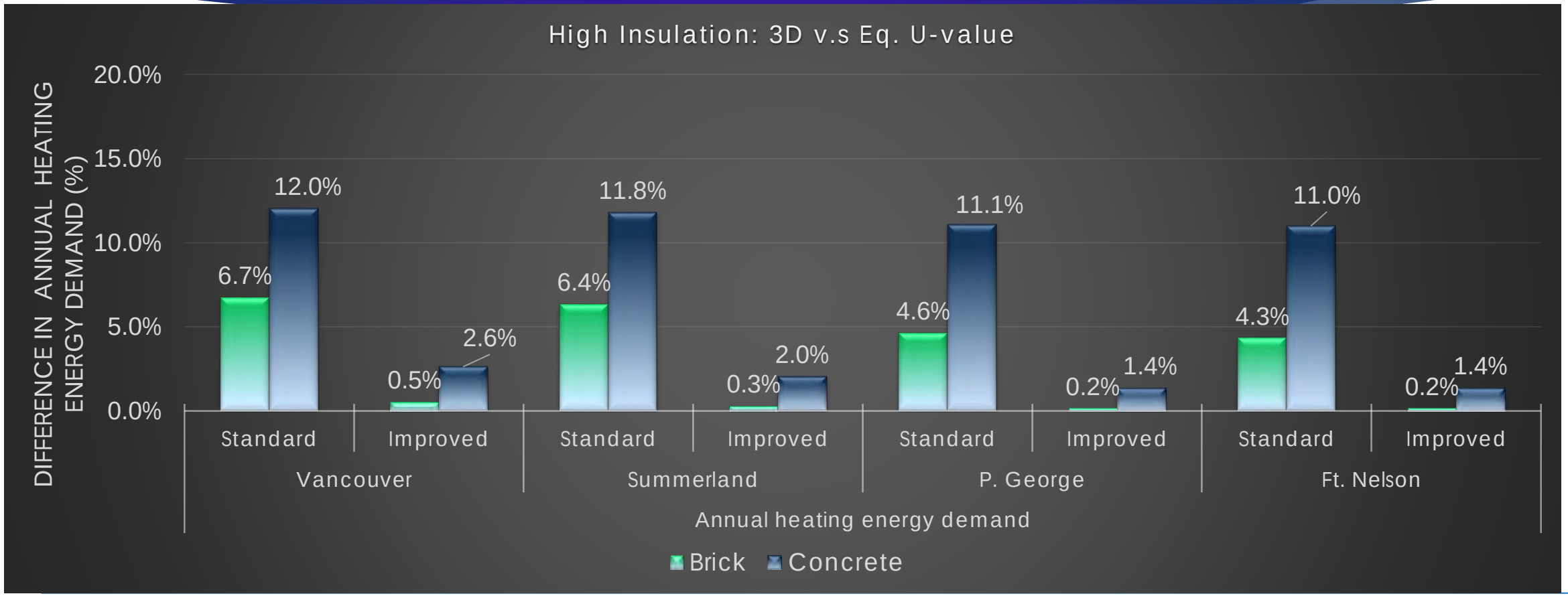

Results and Discussion

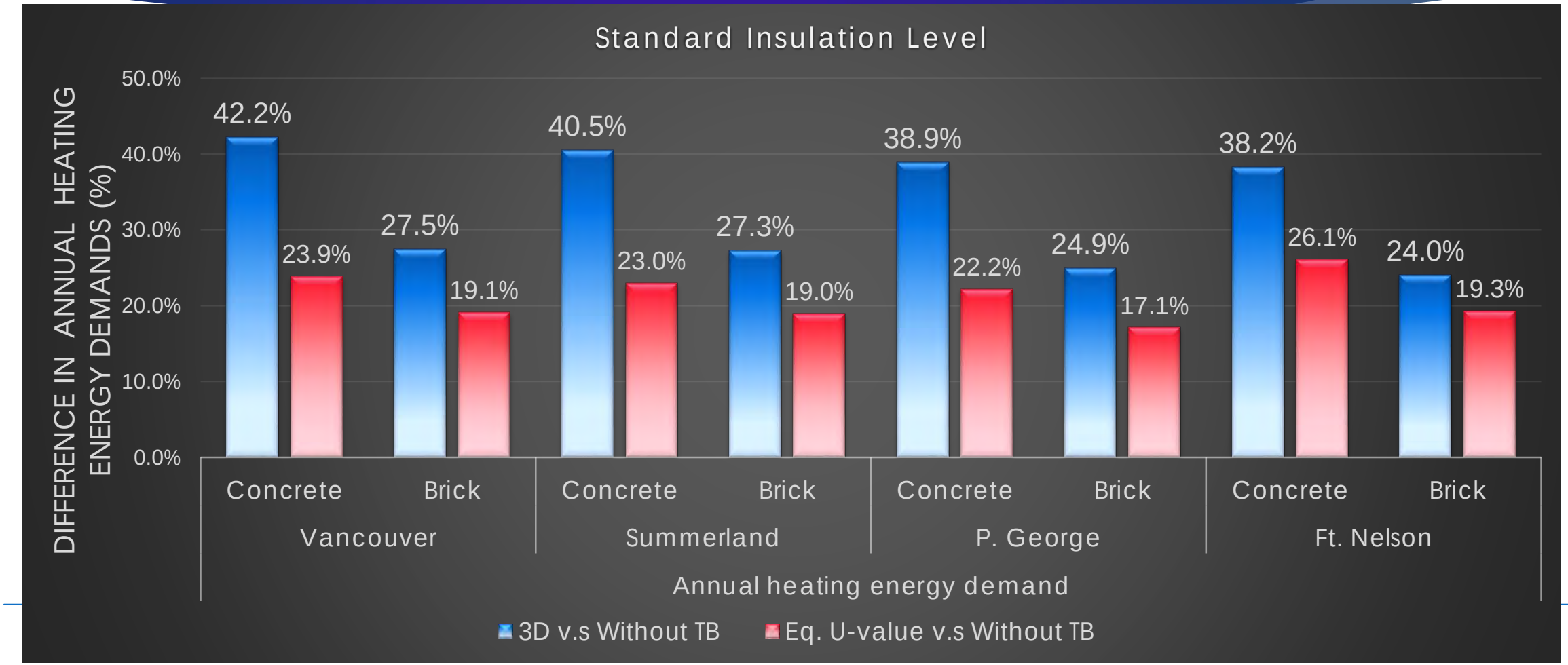

Conclusions

- The equivalent U-value method can underestimate the annual space heating energy demand by up to 13%;
- The difference between 3D dynamic modeling and the equivalent U-value method is reduced to less than 4% when the connection details are improved.
- With the increase of insulation level, the contribution of thermal bridges to the energy Demand significantly increases, while the dynamic effect of thermal bridges slightly decreases
- Efforts should be placed on designing good building envelope connection details to minimize/eliminate thermal bridges, especially when higher insulation and better windows used
  - Reduce energy consumption; reduce modeling errors

ACKNOWLEDGEMENT

BC HOUSING

Building Excellence Research & Education Grants Program
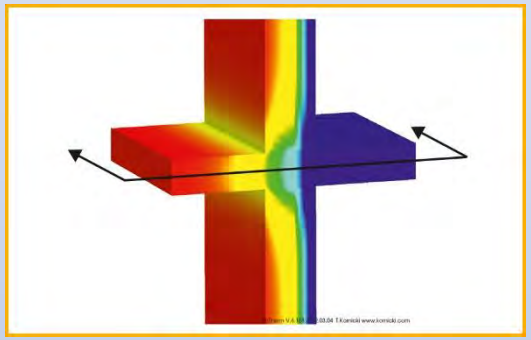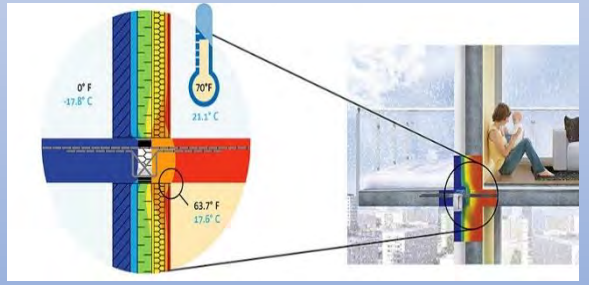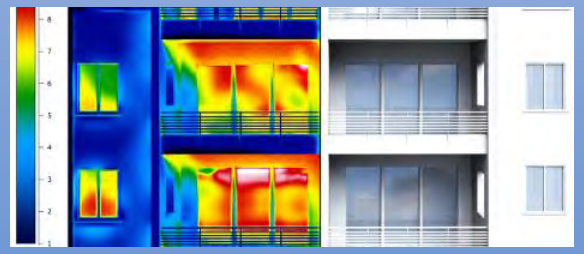
Thank you for Your Attention