Determining Total-Assembly R-Values

Alex McGowan, Senior Manager, Building Sciences
National Leader, Quality and Innovation

15th Canadian Conference on Building Science and Technology Vancouver, Canada

Determining Total-Assembly R-Values

- Why?
- R-value Requirements
- Evaluation Methods
- Conclusions

Determining Total-Assembly R-Values

ASHRAE 90.1 for walls (Clause A9.2)

- Mass walls: testing, IPM, 2D method*, but NOT PPM
- Metal walls: testing, or A9.4.6 calculation method
- Steel-framed walls: testing, PPM, or Mod Zone
- Wood-framed walls: testing or PPM
- Other walls: testing or 2D method*

NECB

- IPM, then PPM

* 2D method is not defined anywhere in ASHRAE 90.1

WWR / Whole-wall R-Value

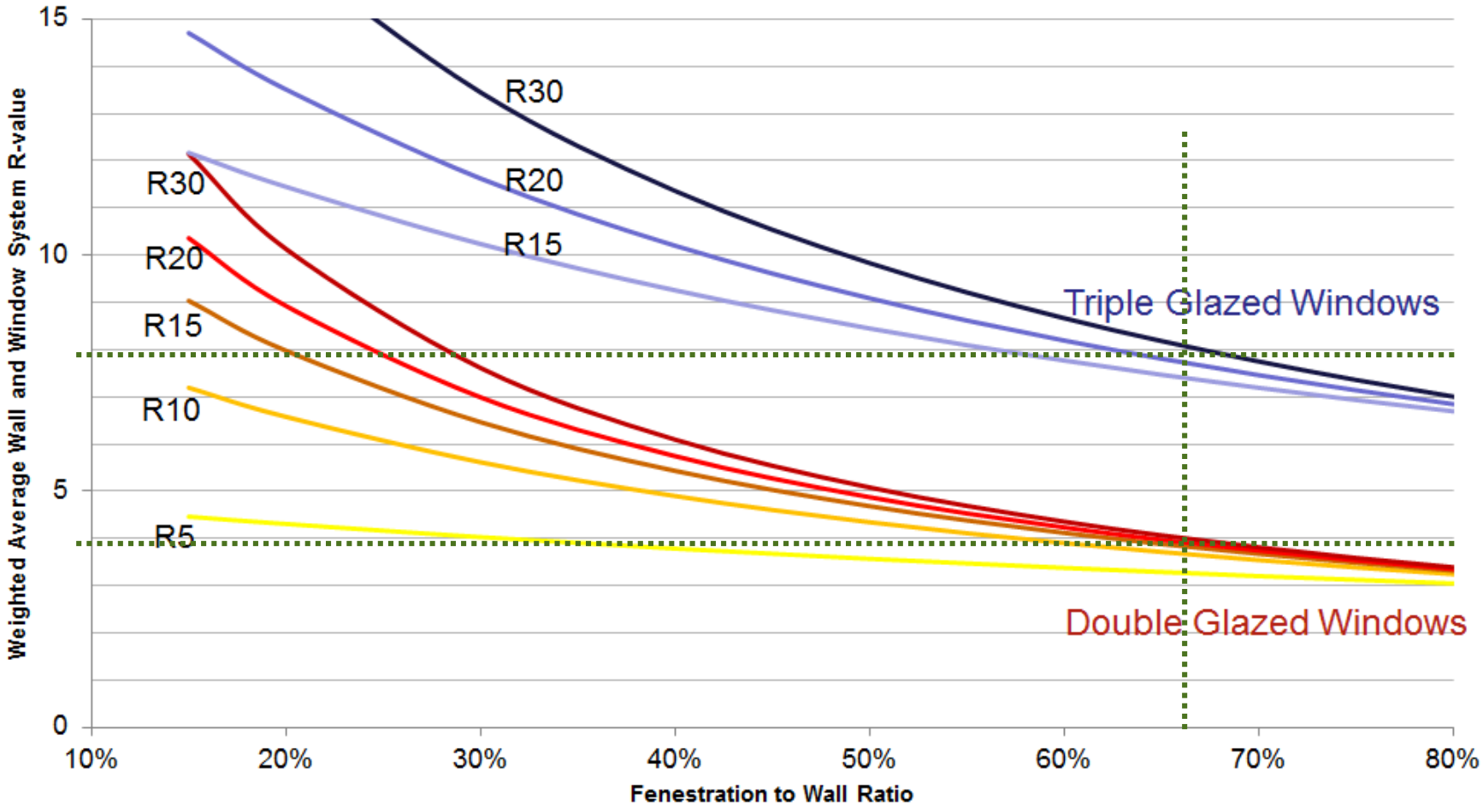

Determining Total-Assembly R-values

Standard	Climate Zone	Non-Residential		Residential	
		Insulation R h·ft^2·°F/Btu (m^2·K/W)	Assembly R, h·ft^2·°F/ Btu (m^2·K/W)	Insulation R h·ft^2·°F/Btu (m^2·K/W)	Assembly R, h·ft^2·°F/ Btu (m^2·K/W)
ASHRAE 90.1 2013 or 90.1-2016	4	R13+7.5 ci (2.3+1.3 ci)	R15.6 (RSI 2.7)	R13+7.5 ci (2.3+1.3 ci)	R15.6 (RSI 2.7)
	5	R13+10 ci (2.3+1.8 ci)	R18.2 (RSI 3.3)	R13+10 ci (2.3+1.8 ci)	R18.2 (RSI 3.3)
	6	R13+R12.5 ci (2.3+2.2 ci)	R20.4 (RSI 3.6)	R13+R12.5 ci (2.3+2.2 ci)	R20.4 (RSI 3.6)
	7	R13+R12.5 ci (2.3+2.2 ci)	R20.4 (RSI 3.6)	R13+15.6 ci (2.3+2.7 ci)	R23.8 (RSI 4.2)
	8	R13+18.8 ci (2.3+3.3 ci)	R27.0 (RSI 4.8)	R13+18.8 ci (2.3+3.3 ci)	R27.0 (RSI 4.75)
ASHRAE 90.1 2010	4	R13+7.5 ci (2.3+1.3 ci)	R15.6 (RSI 2.7)	R13+7.5 ci (2.3+1.3 ci)	R15.6 (RSI 2.7)
	5	R13+7.5 ci (2.3+1.3 ci)	R15.6 (RSI 2.7)	R13+7.5 ci (2.3+1.3 ci)	R15.6 (RSI 2.7)
	6	R13+7.5 ci (2.3+1.3 ci)	R15.6 (RSI 2.7)	R13+7.5 ci (2.3+1.3 ci)	R15.6 (RSI 2.7)
	7	R13+7.5 ci (2.3+1.3 ci)	R15.6 (RSI 2.7)	R13+15.6 ci (2.3+2.7 ci)	R23.8 (RSI 4.2)
	8	R13+7.5 ci (2.3+1.3 ci)	R15.6 (RSI 2.7)	R13+18.8 ci (2.3+3.3 ci)	R27.0 (RSI 4.75)
(NECB) 2011 or 2015	4	Not Applicable	R18 (RSI 3.2)	Not Applicable	
	5		R20.4 (RSI 3.6)		
	6		R23 (RSI 4.1)		
	7		R27 (RSI 4.75)		
	8		R31 (RSI 5.46)		

Evaluation Methods

- Physical Measurement
- Computer Simulation
- “Hand Calculation”
    - Parallel-Path
    - Isothermal Planes
    - EN/ISO 6946
    - Zone
    - Modified Zone
    - BRANZ

Physical Testing (ASTM C1363)

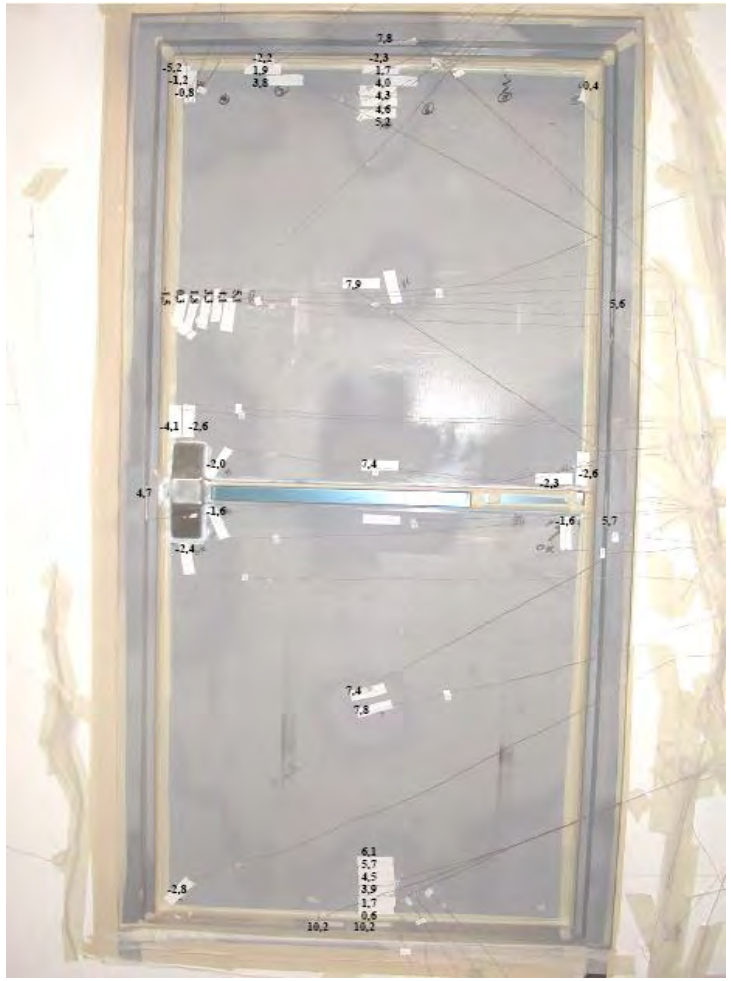

Computer Simulation

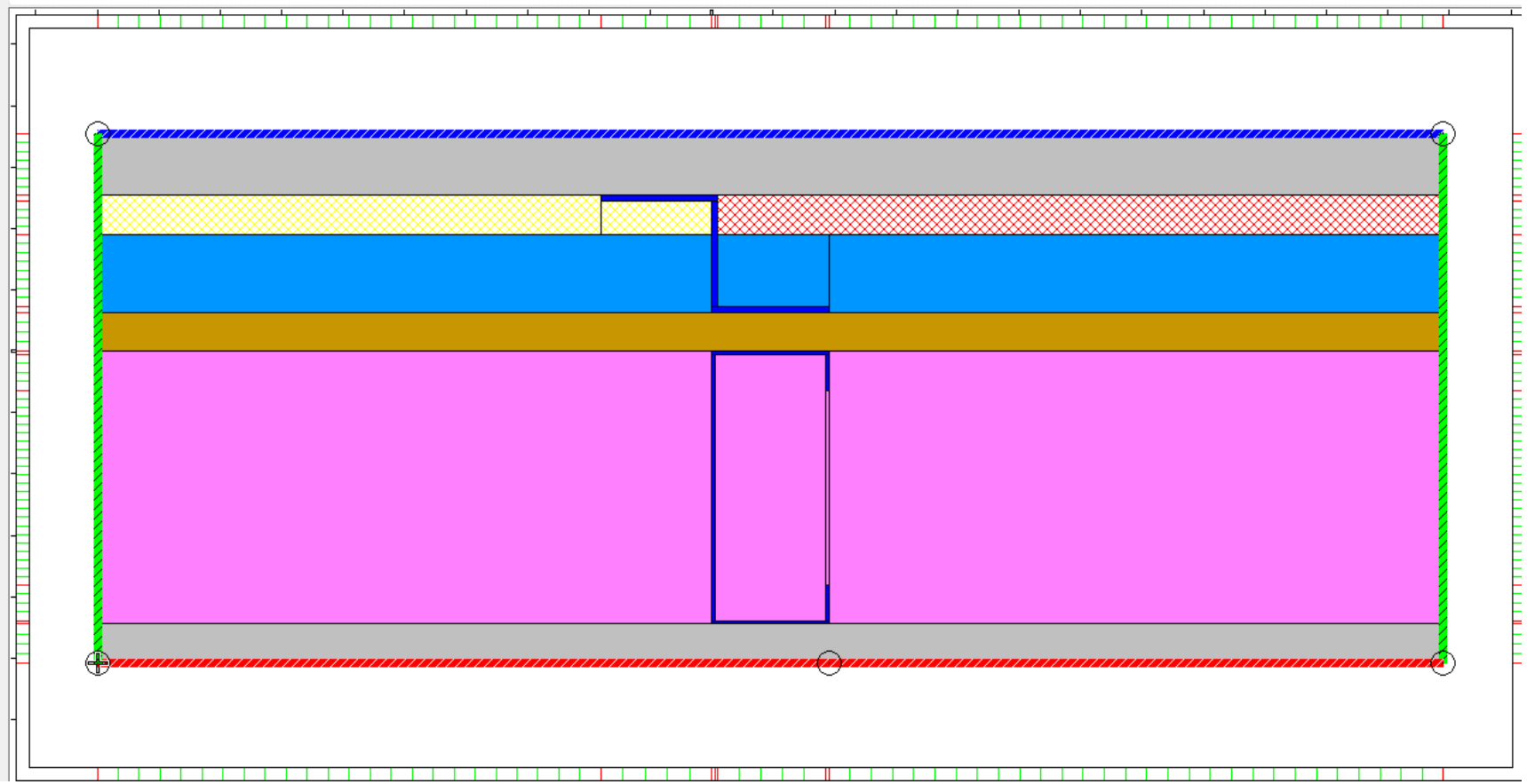

Computer Simulation

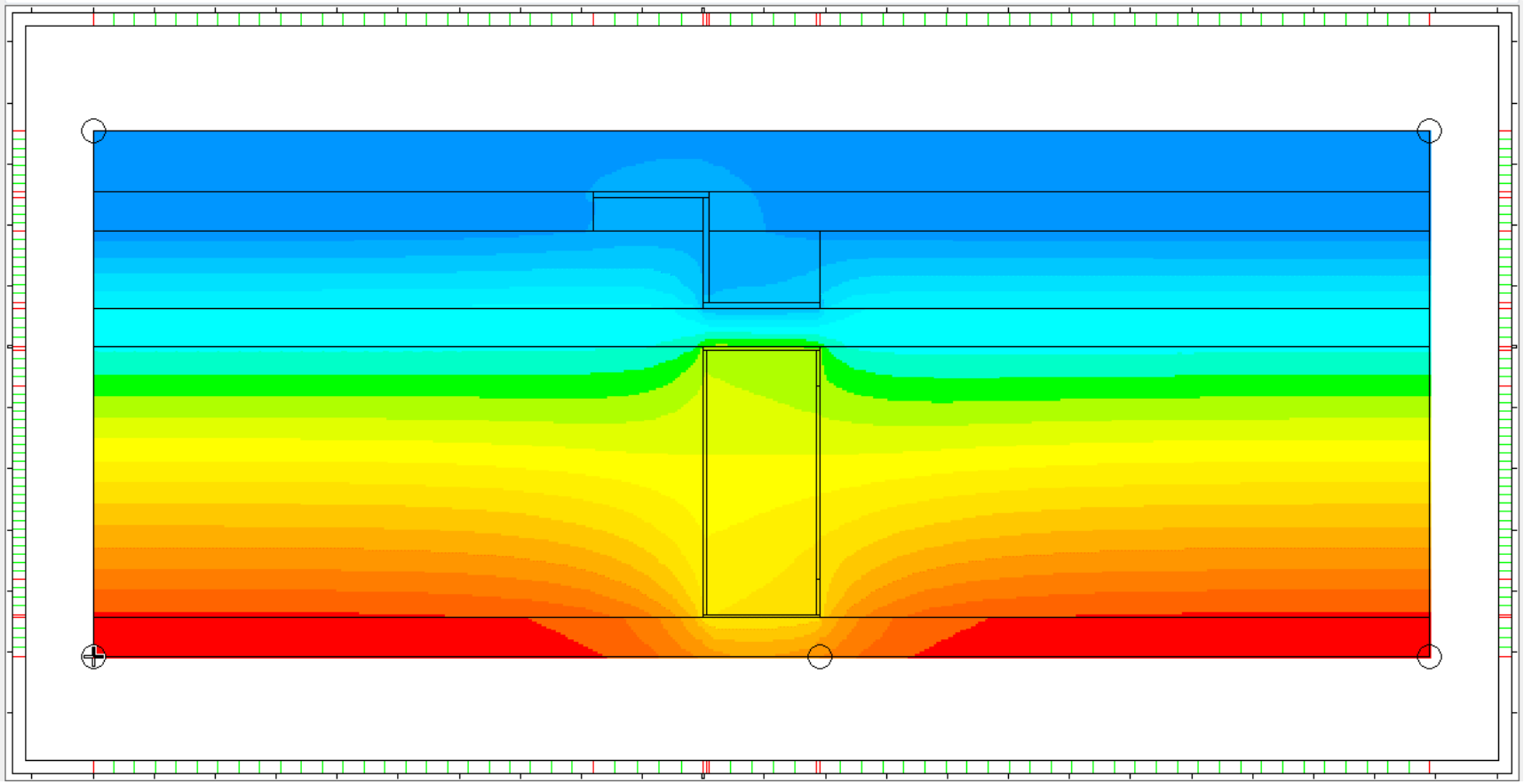

Computer Simulation

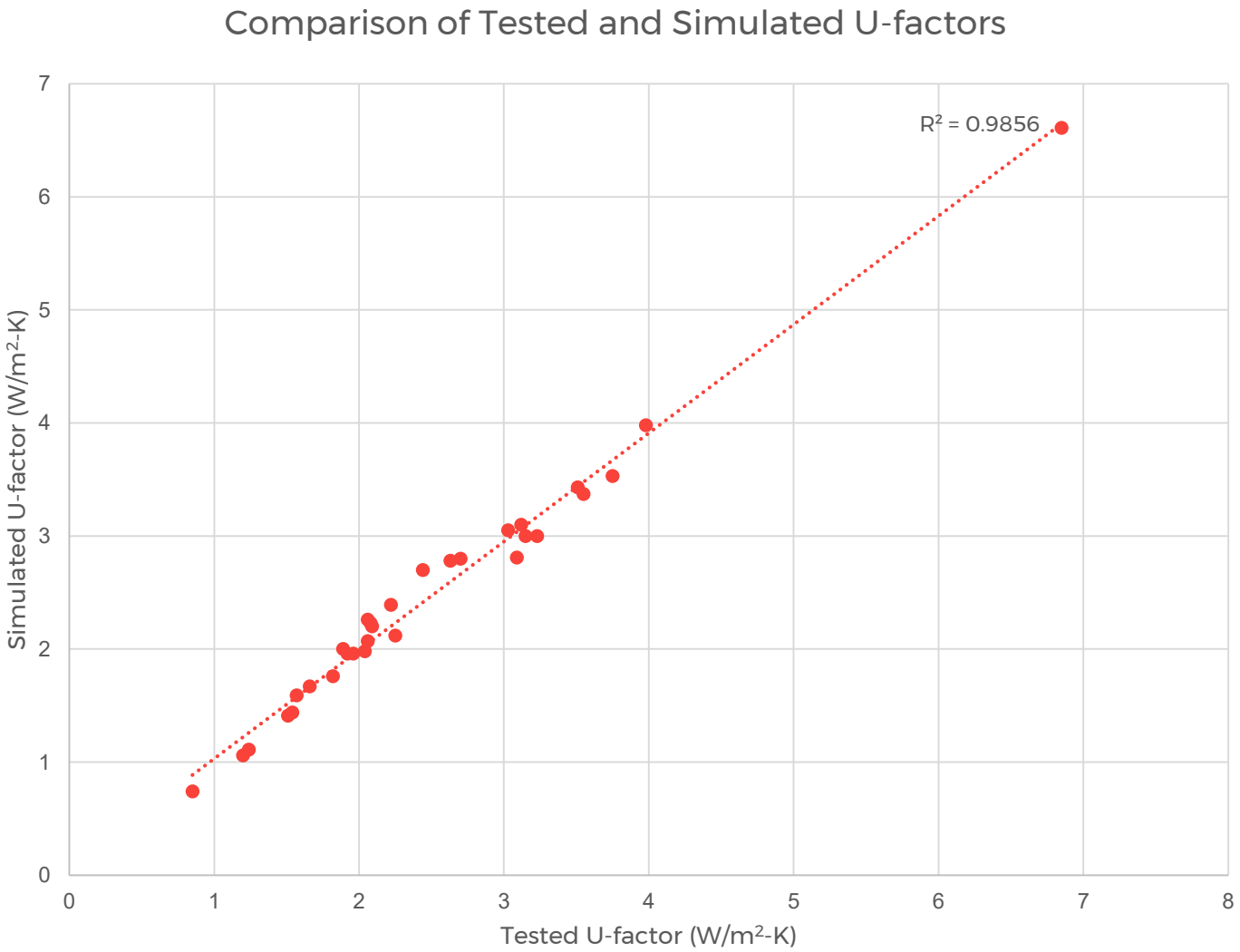

ASHRAE Research

ASHRAE 877-RP (1998)	Total-assembly U-factor BTU/h·ft²·F (W/m²·K)		% diff
	Test	Simulation	
Pyramid (winter)	1.02 (5.79) ±5.9%	1.05 (5.97)	+2.3
Pyramid (summer)	1.11 (6.3) ±3.4%	1.17 (6.64)	+5.4
Barrel (winter)	1.26 (7.15) ±5.1%	1.34 (7.61)	+6.6
Barrel (summer)	1.30 (7.38) ±3.6%	1.34 (7.61)	+2.7
3-wing Revolving Door from ASHRAE 1236-RP (2006)	0.82 (4.66)	0.80 (4.53)	+2.9

“Hand Calculation” – Parallel-Path Method (PPM)

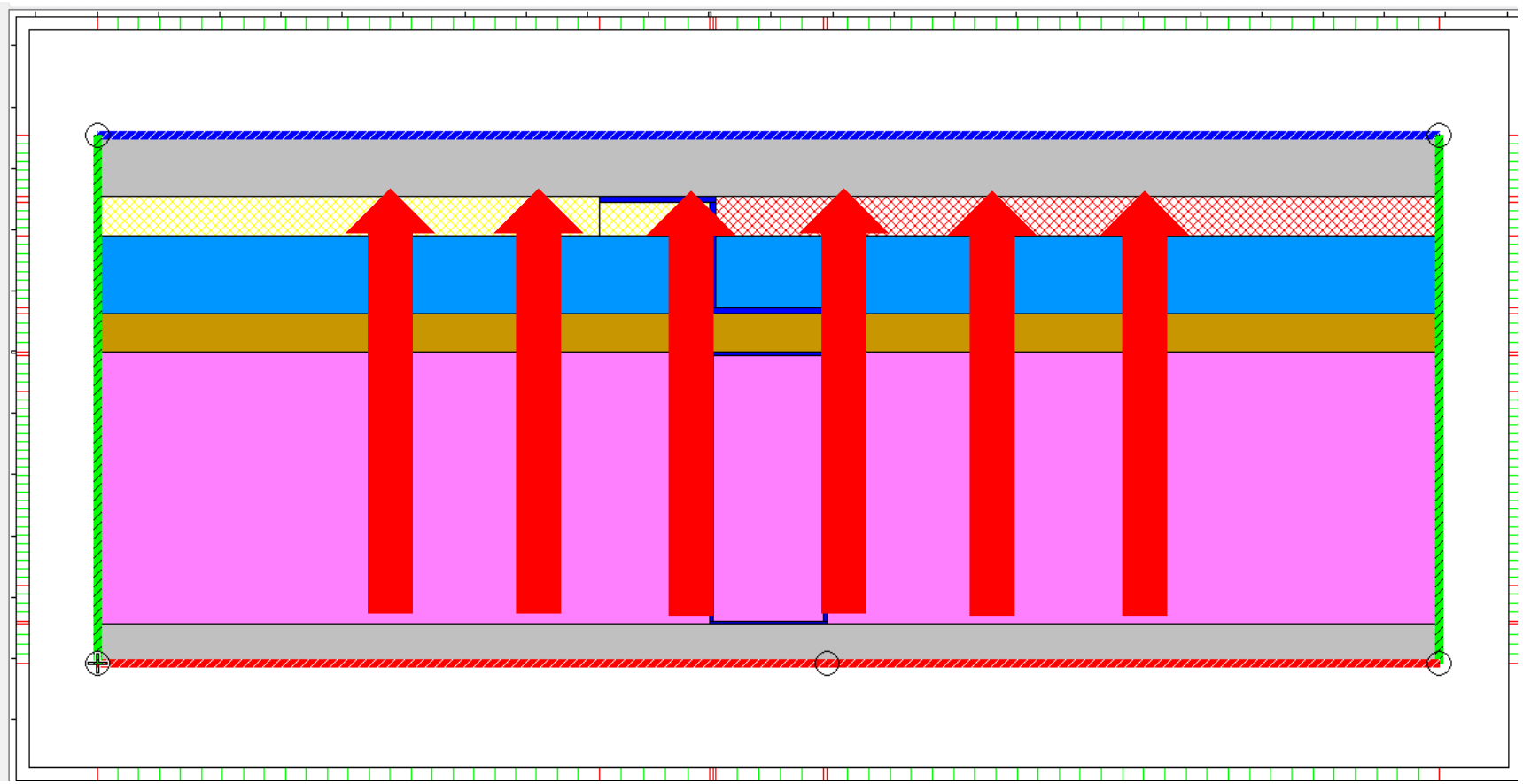

“Hand Calculation” – Isothermal Planes Method (IPM)

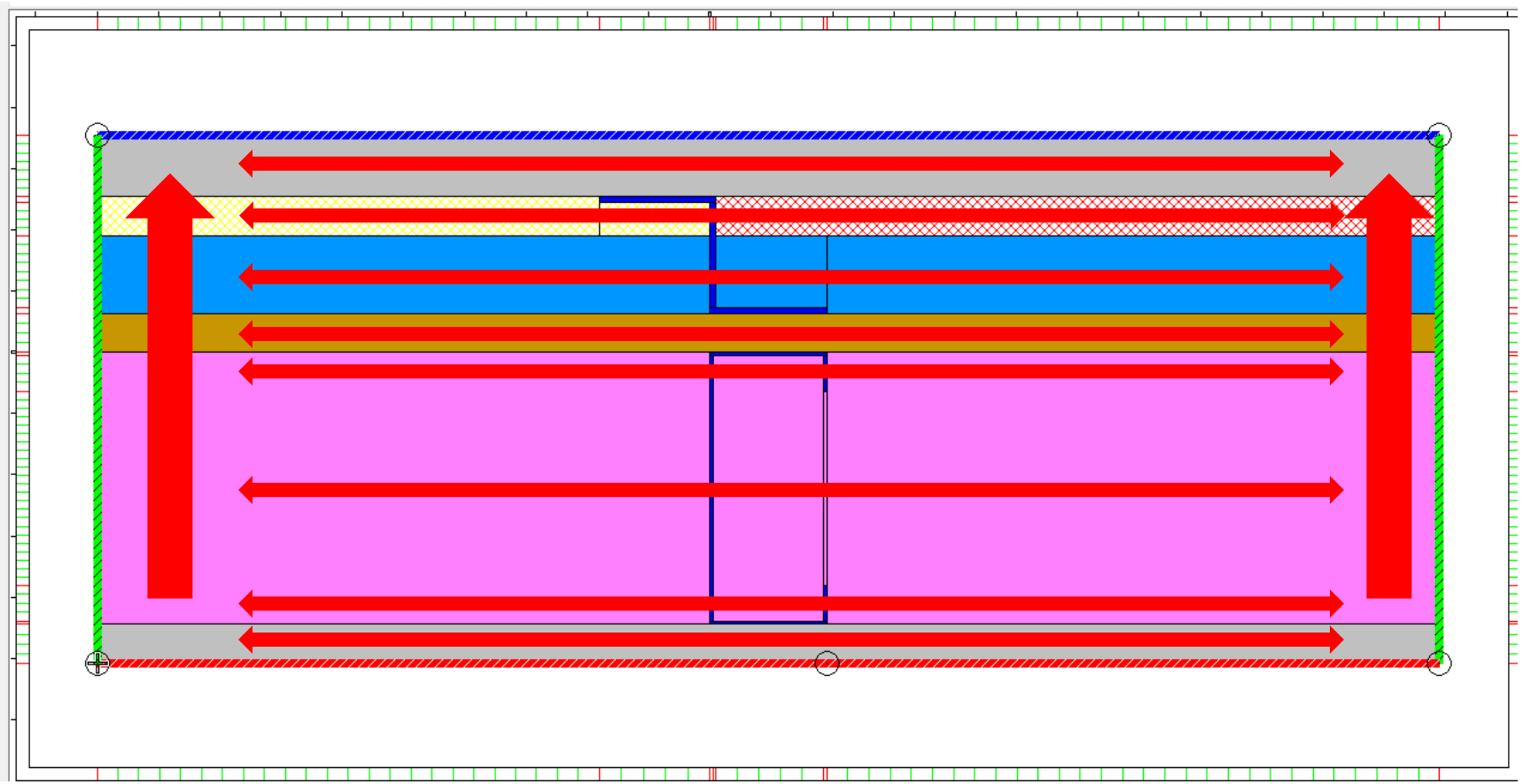

Computer Simulation

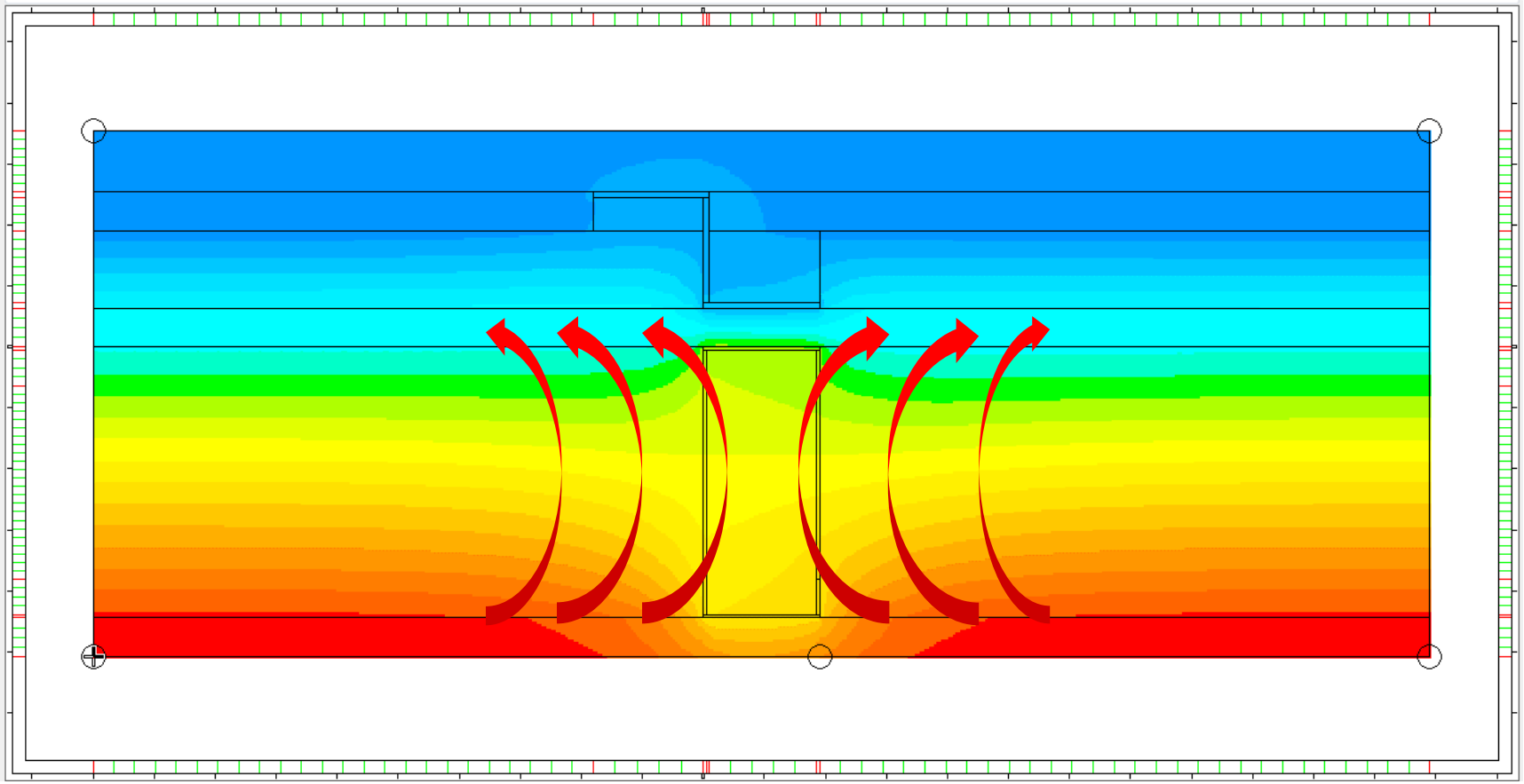

“Hand Calculation” – Zone Method

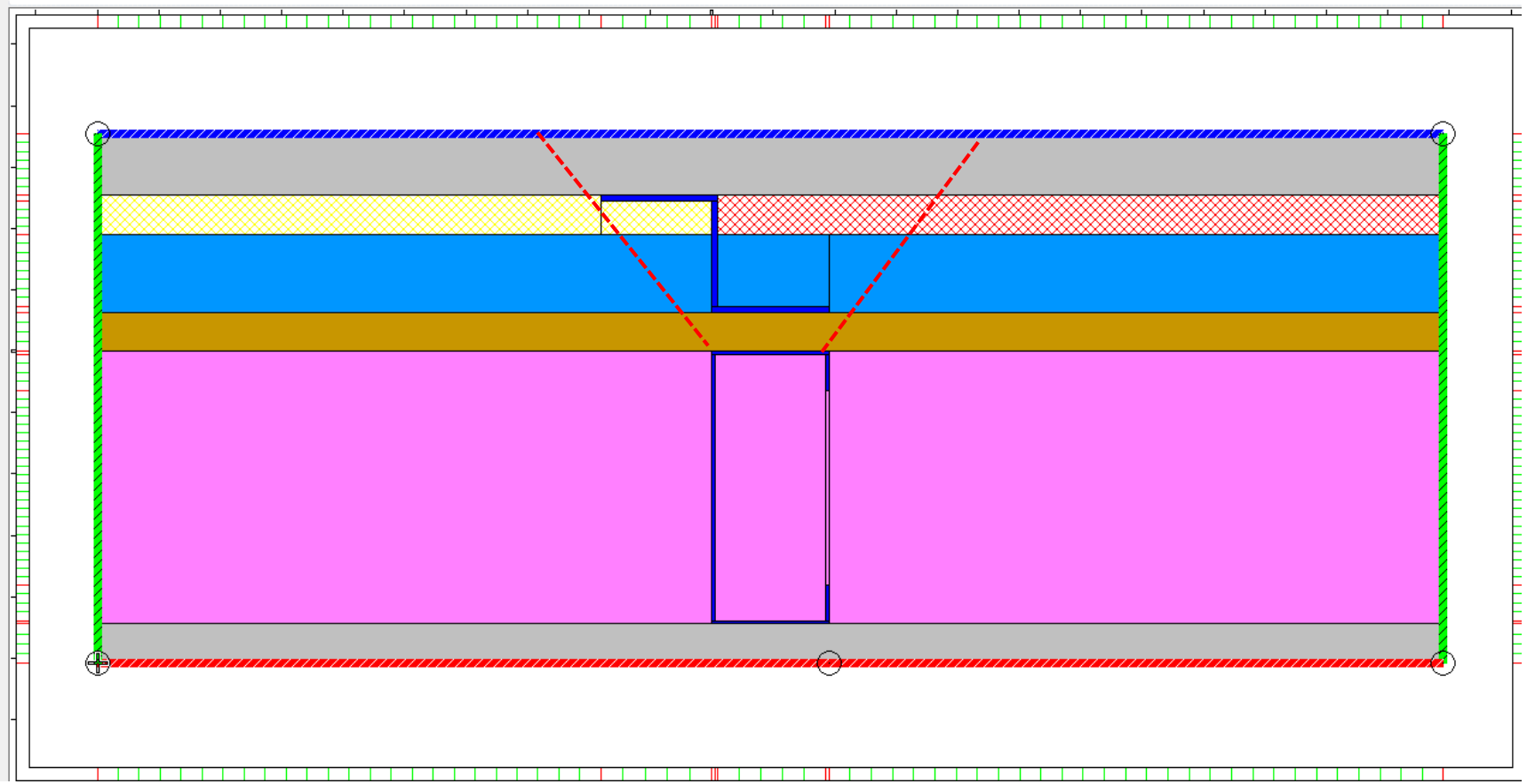

ASHRAE 785-RP (1996)

STEEL WALL SYSTEMS (TEST SERIES A AND B)

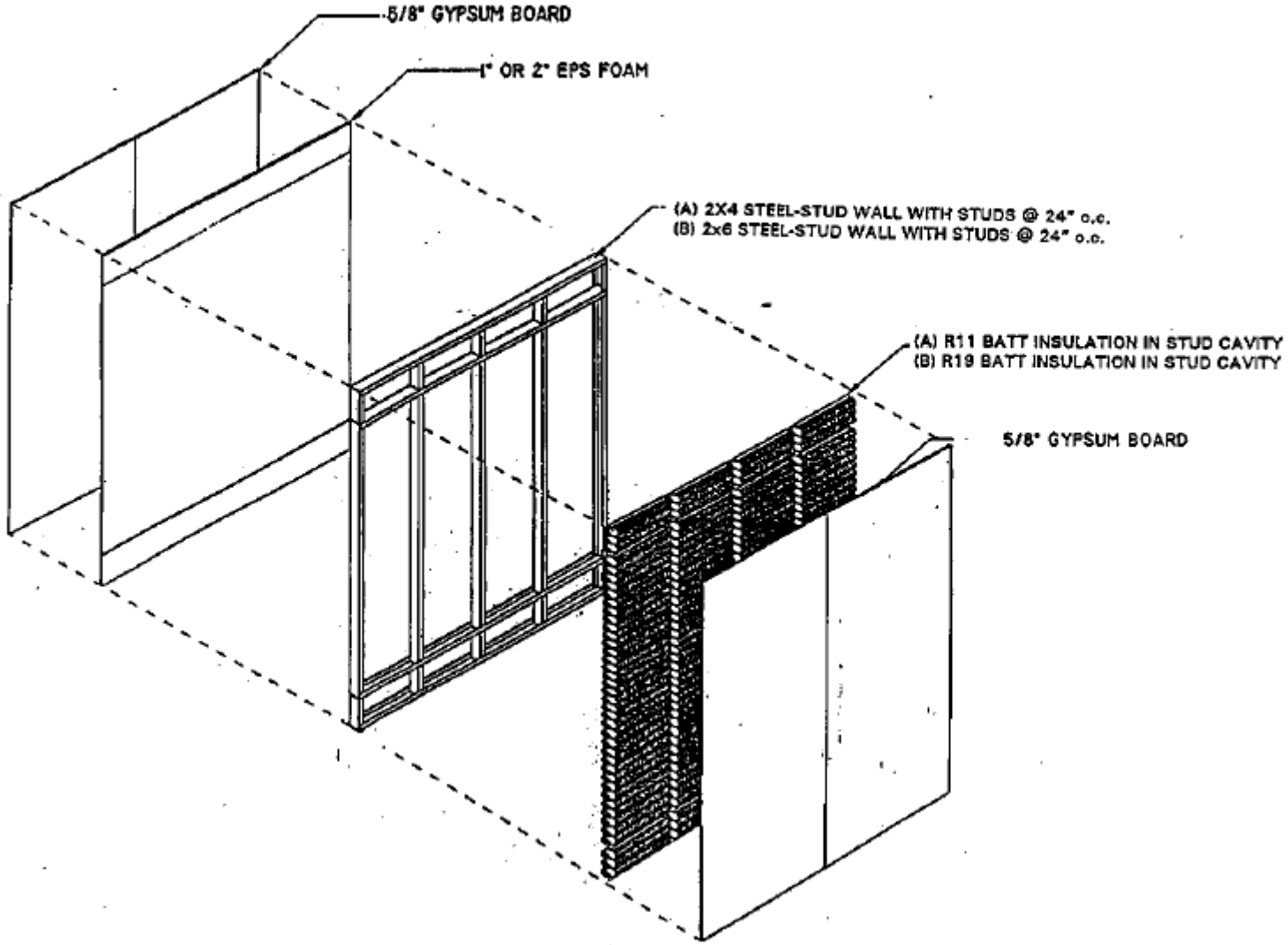

ASHRAE 785-RP (1996)

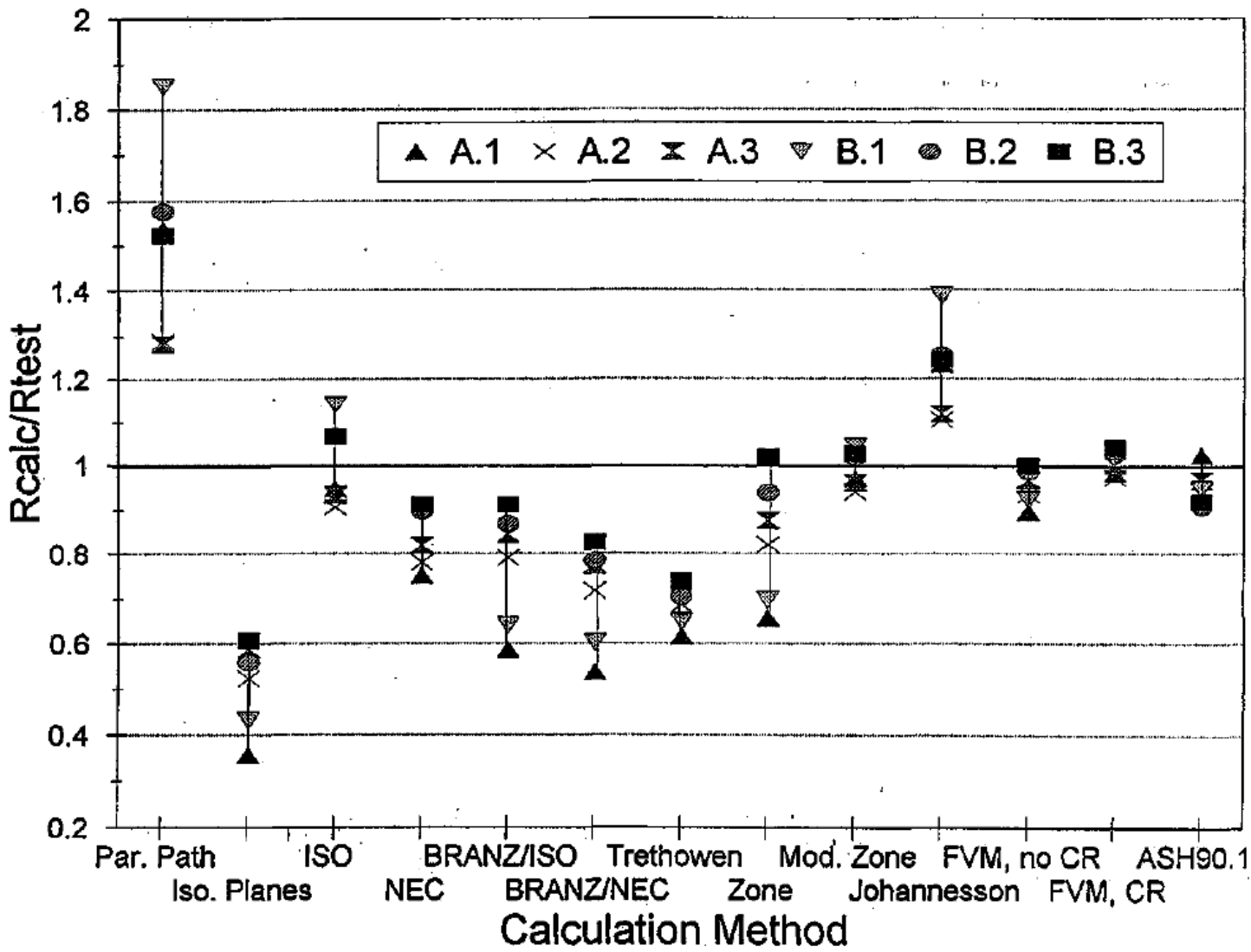

ASHRAE 785-RP (1996)

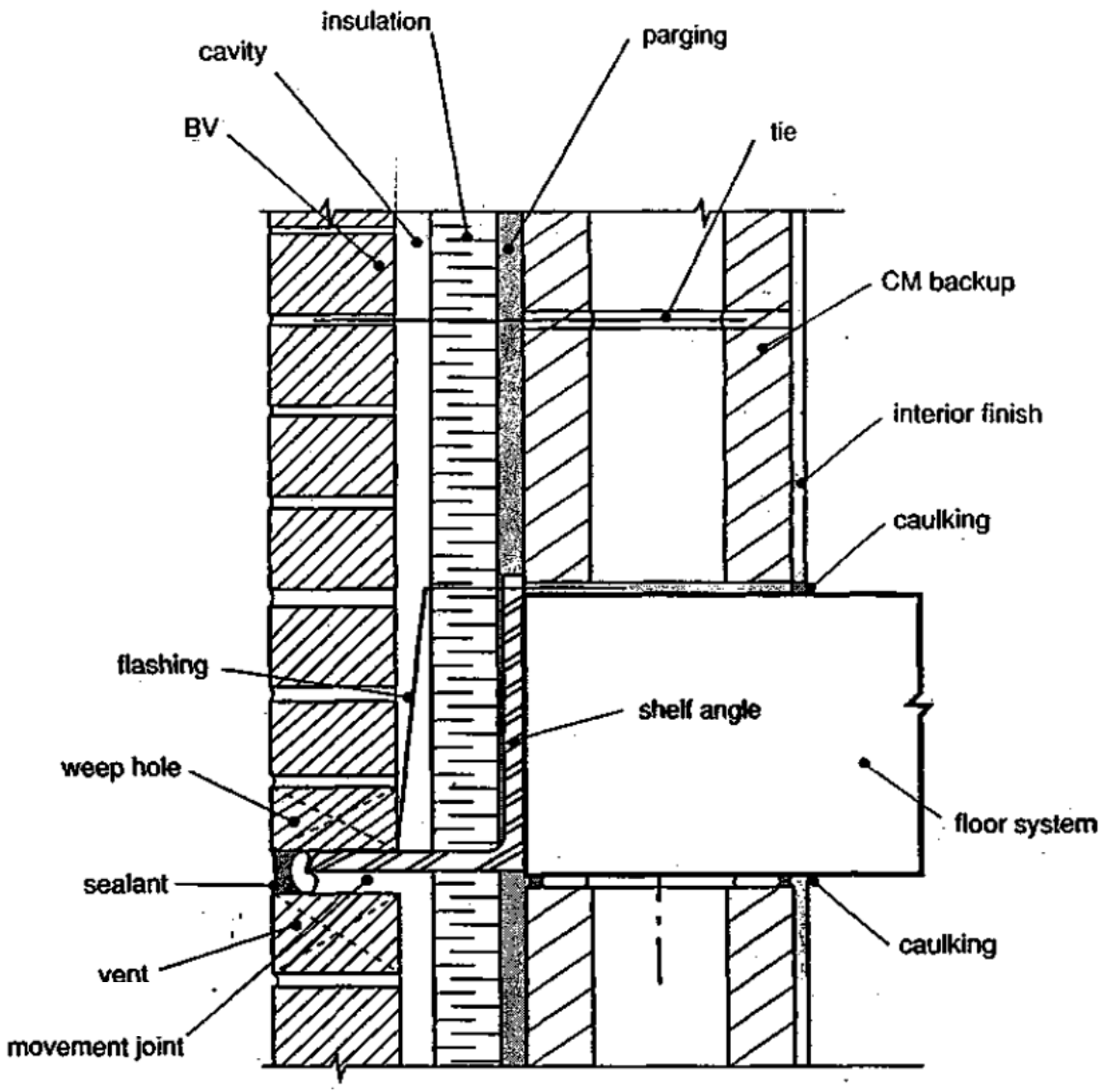

ASHRAE 785-RP (1996)

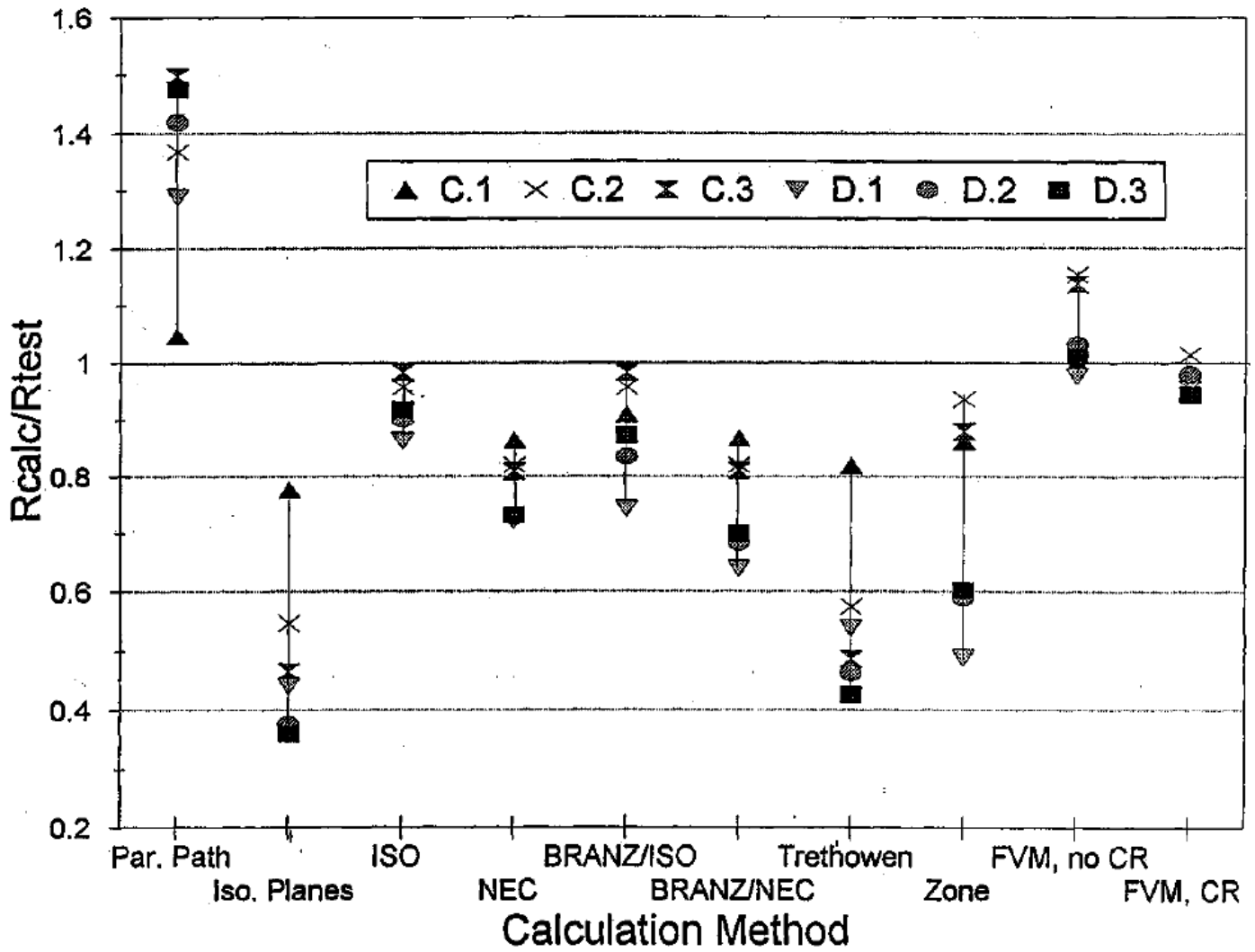

Implementing ASHRAE 785-RP (ISO 6946)

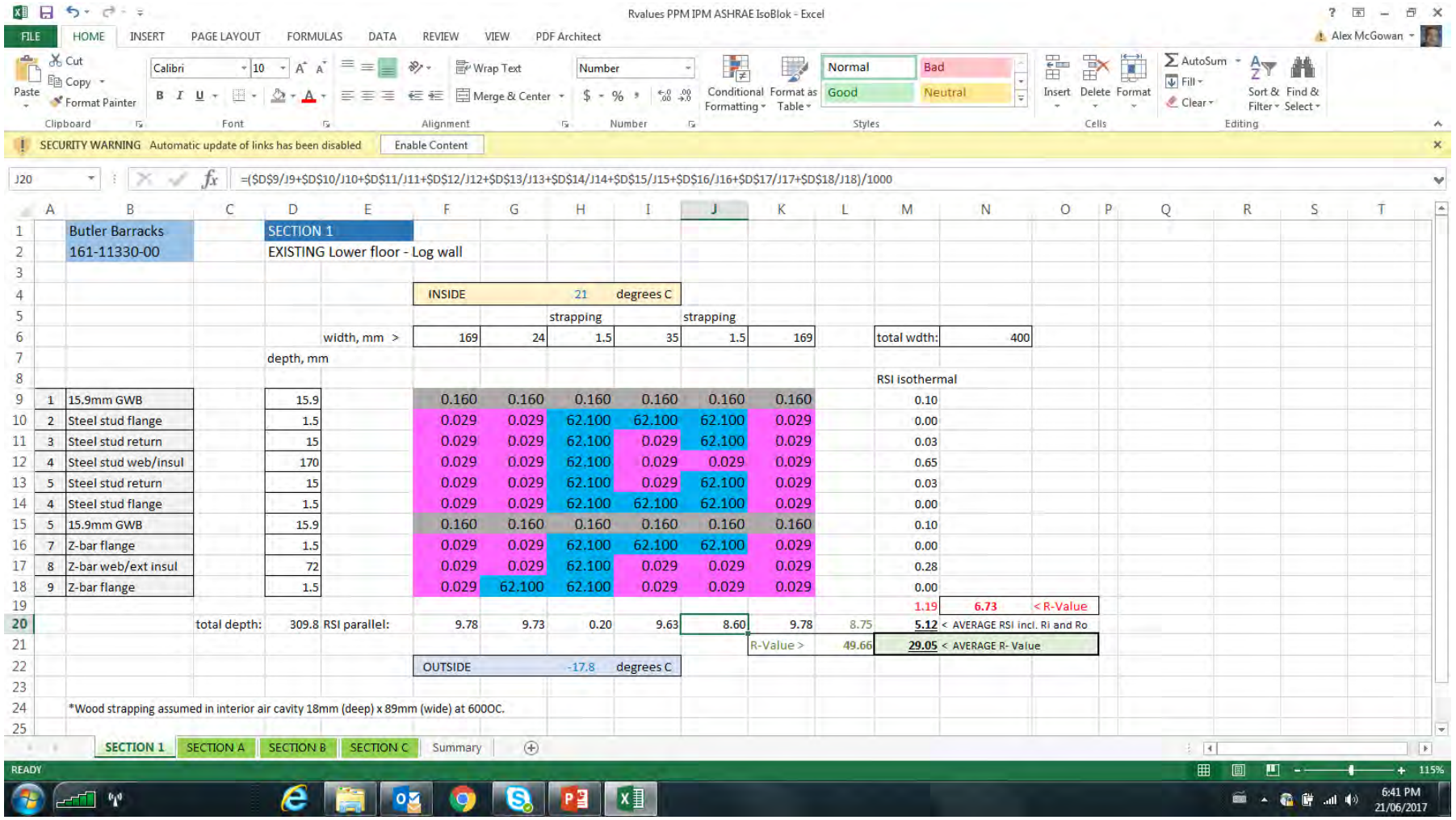

Rvalues PPM IPM ASHRAE IsoBlok - Excel

J20 =($D$9/J9+$D$10/J10+$D$11/J11+$D$12/J12+$D$13/J13+$D$14/J14+$D$15/J15+$D$16/J16+$D$17/J17+$D$18/J18)/1000

	A	B	C	D	E	F	G	H	I	J	K	L	M	N	O
1		Butler Barracks		SECTION 1											
2		161-11330-00		EXISTING Lower floor - Log wall											
3															
4						INSIDE		21	degrees C						
5								strapping		strapping					
6					width, mm >	169	24	1.5	35	1.5	169		total wdth:	400	
7				depth, mm											
8													RSI isothermal		
9	1	15.9mm GWB		15.9		0.160	0.160	0.160	0.160	0.160	0.160		0.10		
10	2	Steel stud flange		1.5		0.029	0.029	62.100	62.100	62.100	0.029		0.00		
11	3	Steel stud return		15		0.029	0.029	62.100	0.029	62.100	0.029		0.03		
12	4	Steel stud web/insul		170		0.029	0.029	62.100	0.029	0.029	0.029		0.65		
13	5	Steel stud return		15		0.029	0.029	62.100	0.029	62.100	0.029		0.03		
14	4	Steel stud flange		1.5		0.029	0.029	62.100	62.100	62.100	0.029		0.00		
15	5	15.9mm GWB		15.9		0.160	0.160	0.160	0.160	0.160	0.160		0.10		
16	7	Z-bar flange		1.5		0.029	0.029	62.100	62.100	62.100	0.029		0.00		
17	8	Z-bar web/ext insul		72		0.029	0.029	62.100	0.029	0.029	0.029		0.28		
18	9	Z-bar flange		1.5		0.029	62.100	62.100	0.029	0.029	0.029		0.00		
19													1.19	6.73	< R-Value
20			total depth:	309.8	RSI parallel:	9.78	9.73	0.20	9.63	8.60	9.78	8.75	5.12	< AVERAGE RSI incl. Ri and Ro	
21											R-Value >	49.66	29.05	< AVERAGE R- Value	
22						OUTSIDE		-17.8	degrees C						
23															
24		*Wood strapping assumed in interior air cavity 18mm (deep) x 89mm (wide) at 600OC.													
25															

SECTION 1 | SECTION A | SECTION B | SECTION C | Summary

READY 115%

6:41 PM 21/06/2017

WSP - A Global Professional Services Firm

Our Canadian Presence

7,600
EMPLOYEES

150
OFFICES

Alex McGowan
Senior Manager
National Leader,
Quality and Innovation
Building Sciences, WSP
Victoria, BC
250-475-1000
alexander.mcgowan@wsp.com