IMPACT OF INSULATED CONCRETE BALCONY CURB ON INTERIOR CONCRETE SURFACE TEMPEARURE

By

Chuck Murad*, MBSc., B.Eng., C.E.T., BSSO

Department of Architectural Science, Faculty of Engineering and Architectural Science , Ryerson University, Toronto, CANADA

****Currently at Tarion Warranty Corporation, Toronto, CANADA***

About This Presentation

- Issues with cantilevered concrete balcony slab in high-rise MURBs
- Current industry responses
- Proposed alternate solution(s)
- Predicted performance of alternate solution(s)
- Impact of alternate solution(s)
- What's next? Or, NEW

Issues with Cantilevered Concrete Balcony Slab

- Increased heat loss / energy consumption
- Decreased thermal comfort i.e. cold floor, condensation and mould growth

Issues with Cantilevered Concrete Balcony Slab

- Increased heat loss/energy consumption

http://www.buildingscience.com/documents/insights/bsi062-thermal-bridges-redux

Issues with Cantilevered Concrete Balcony Slab

- Decreased thermal comfort i.e. cold floor, condensation and mould growth

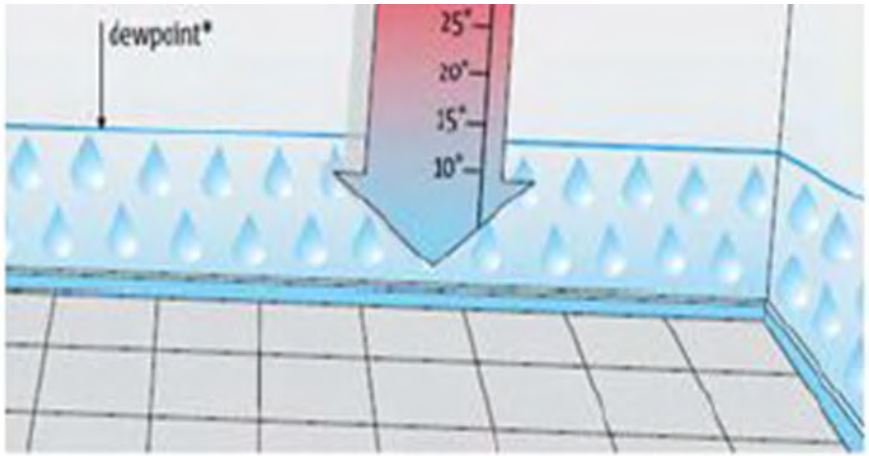

http://www.schoeck.ca/upload/documents/flashbook/en_us/isokorb_/design_guide_schoeck_isokorb_solutions_to_prevent__14-07-07_5752/files/assets/basic-html/index.html#1

Current industry responses

- Do nothing (majority)
- Insulated raised concrete curb – Great solution (not a Barrier- Free option)
- Thermally broken & Structurally Separated Balconies from the Building Structure
- Thermal breaks (costly approach)

Current industry responses

- Insulated raised concrete curb

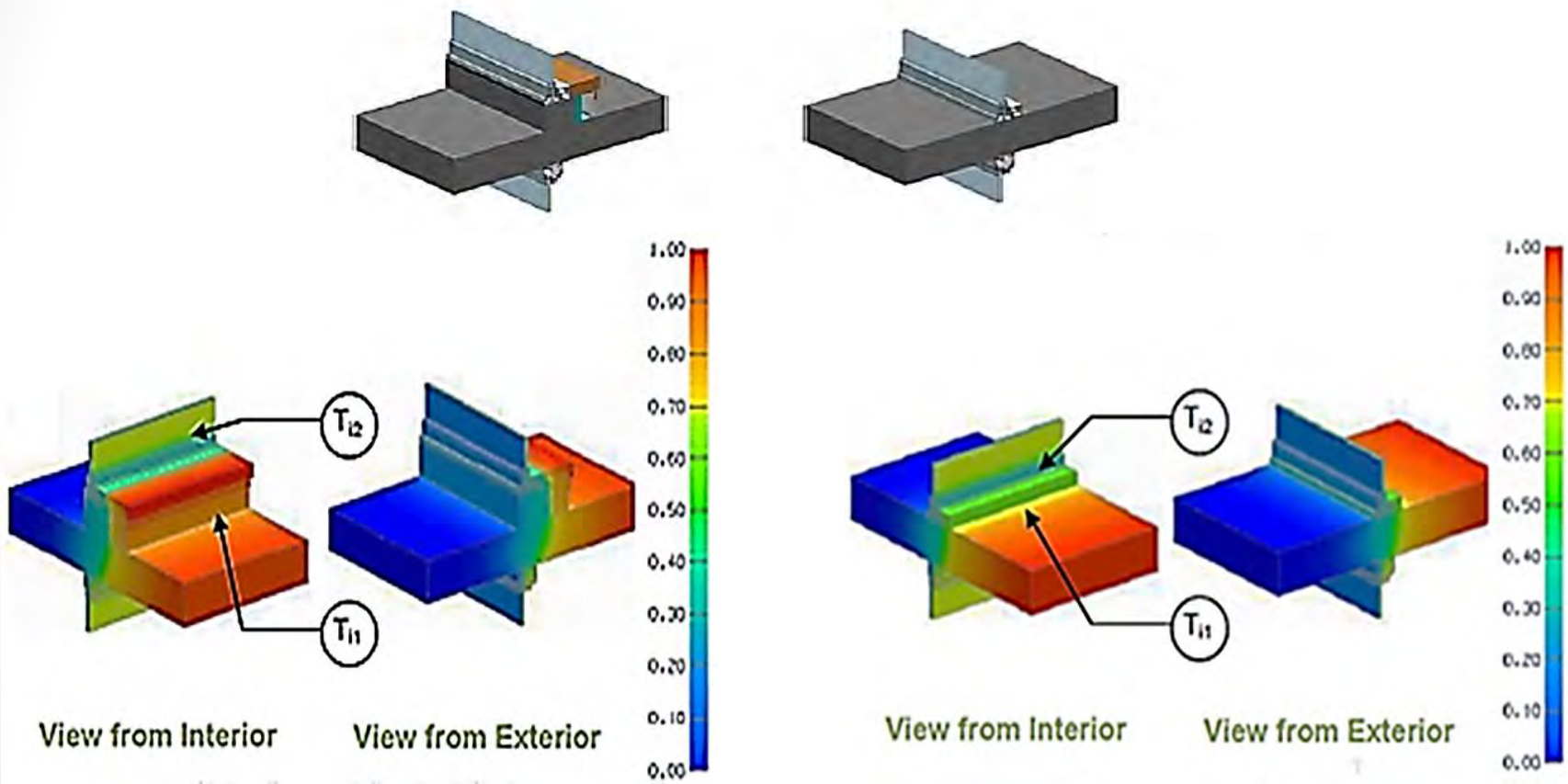

Morrison Hershfield Ltd. 2011. ASHRAE RP-1365

Current industry responses

- Thermally broken & Structurally Separated Balconies from the Building Structure

Current industry responses

- Thermal breaks

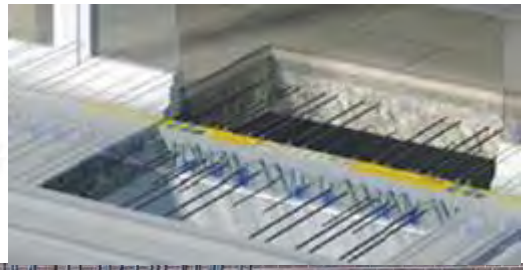

http://www.schoeck.ca/upload/files/download/References_Schoeck_Isokorb_%5B5249%5D.pdf

4%-7% reduction in energy consumption

Current industry responses

- Concerns of current industry responses

- Trip hazards
- Structural issues
- Costs
- Meet the energy code without installing a thermal breaks
- Deal with thermal comfort separately

Proposed Alternate Solutions

Approach

- Use of an insulated concrete curb (depression) condition right below the sliding door/spandrel panel
- Using a low U-value framed glazing system/Increase the thermal properties of window wall/sliding door.

Investigation

- Conduct thermal analyses for different simulated assembly by using THERM
- Results and comparative analyses with previous study that has similar boundary conditions.
- Impact of Results

Proposed Alternate Solutions

- Use of an insulated concrete curb (depression) condition

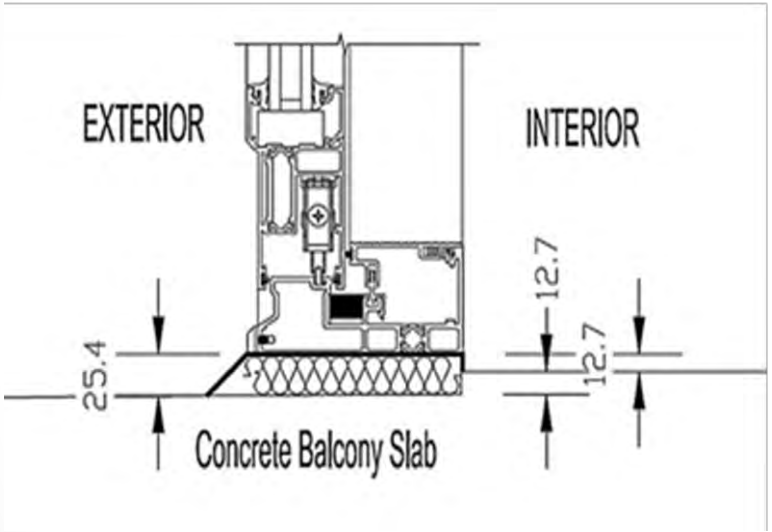

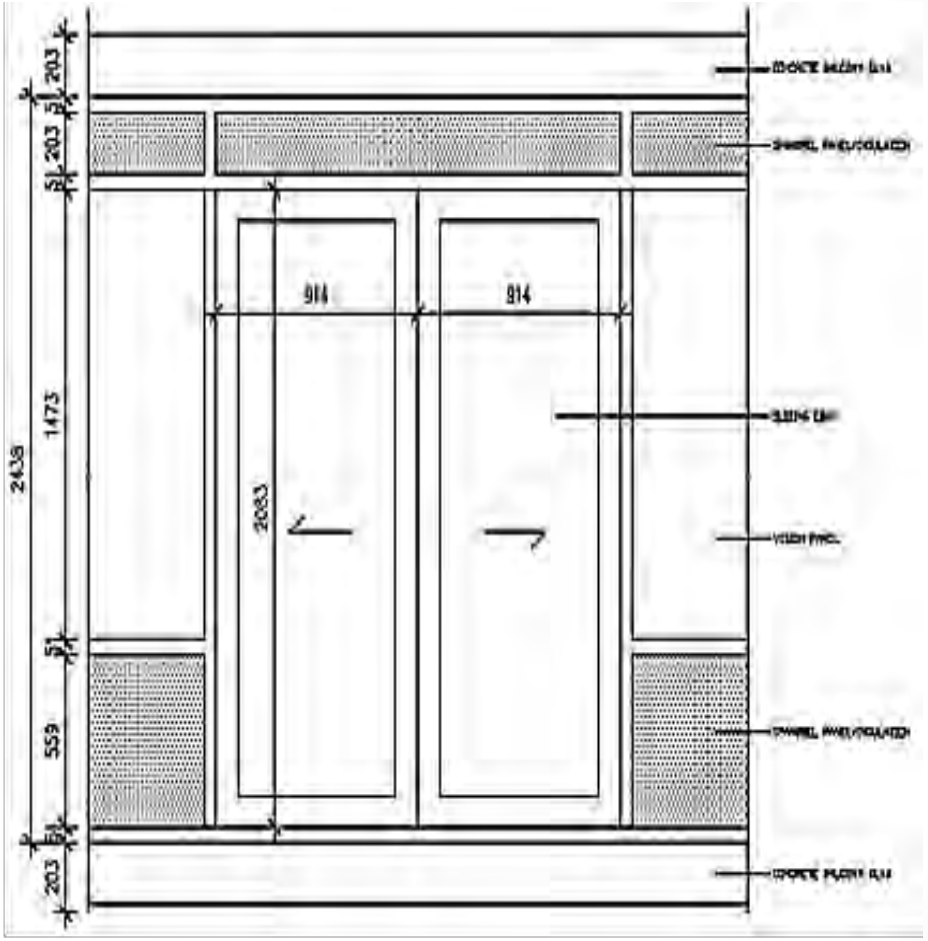

Proposed Alternate Solutions

- Use of an insulated concrete curb (depression) condition

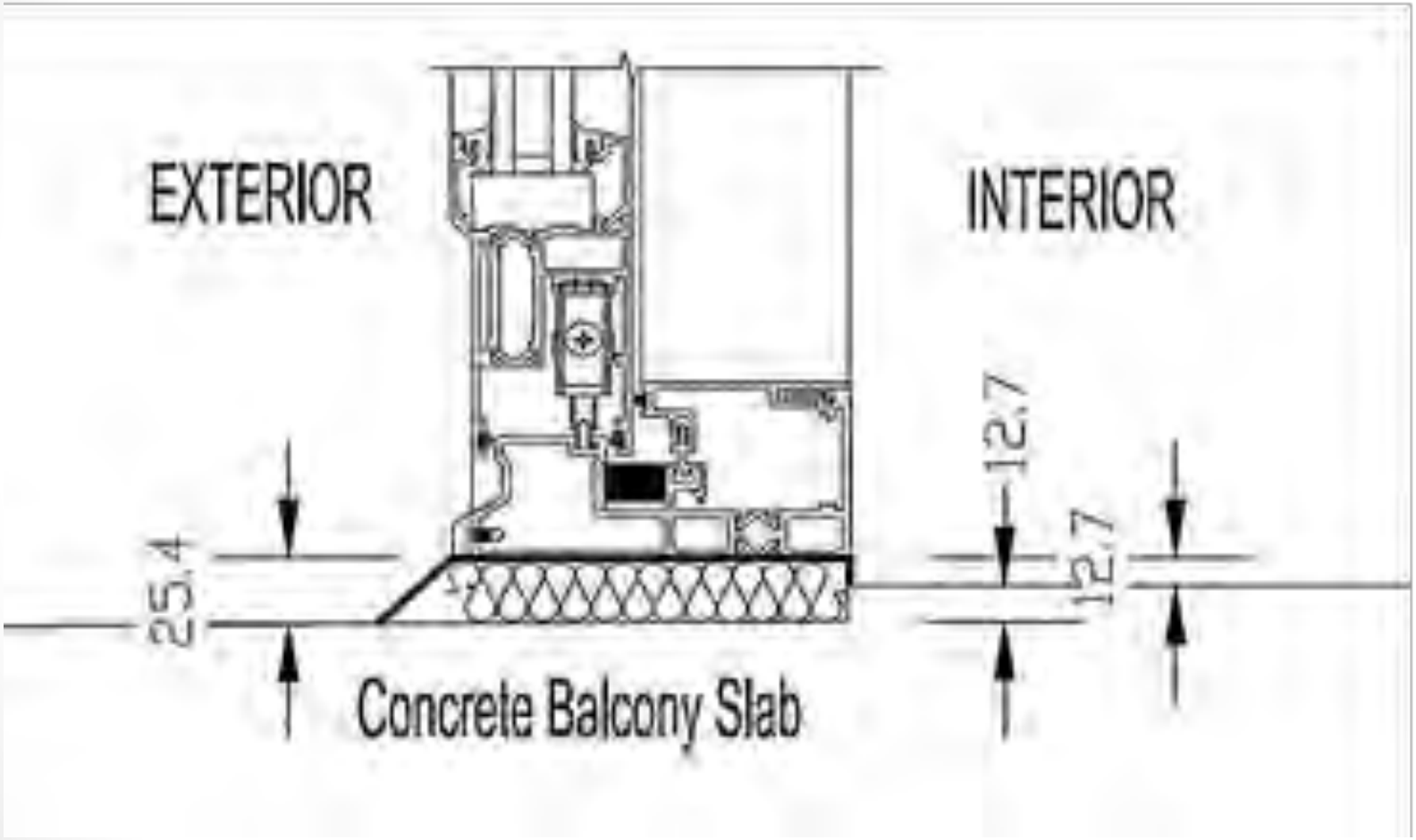

Proposed Alternate Solutions

- **Using a low U-value framed glazing system**

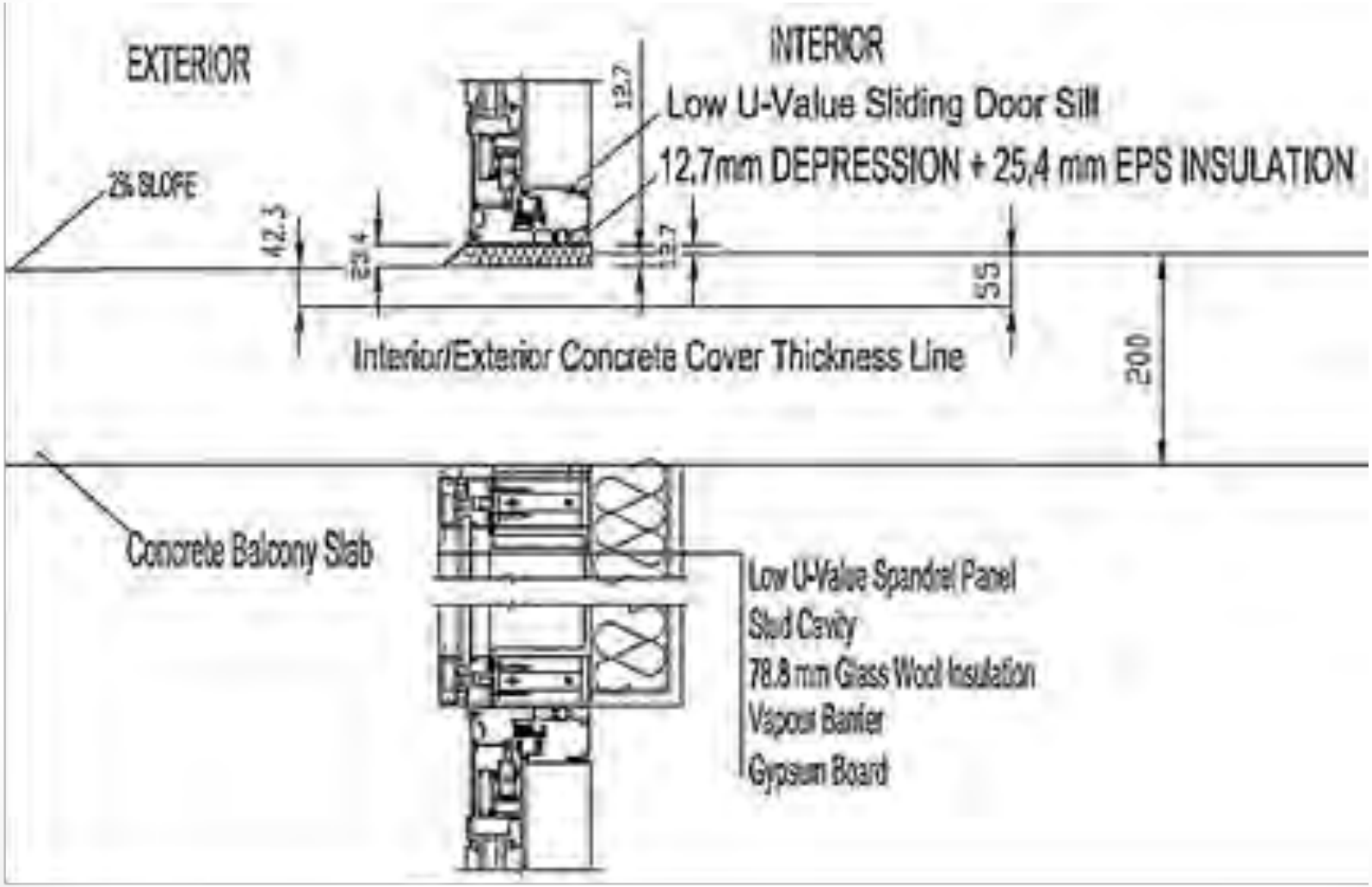

Investigation

- **Thermal analyses for different simulated assembly by using THERM**
- **Eight** scenarios are divided into **two groups of four**.

Group 1 – Spandrel panel above & below balcony slab

- Conventional
- With Insulated curb condition only
- With thermal break only
- With insulated curb condition and thermal break

Group 2 – Sliding door above & spandrel panel below balcony slab

- Conventional
- With insulated curb condition only
- With thermal break only
- With insulated curb condition and thermal break

Predicted Performance of Alternate Solutions

- **THERM RESULTS**

GROUP 1

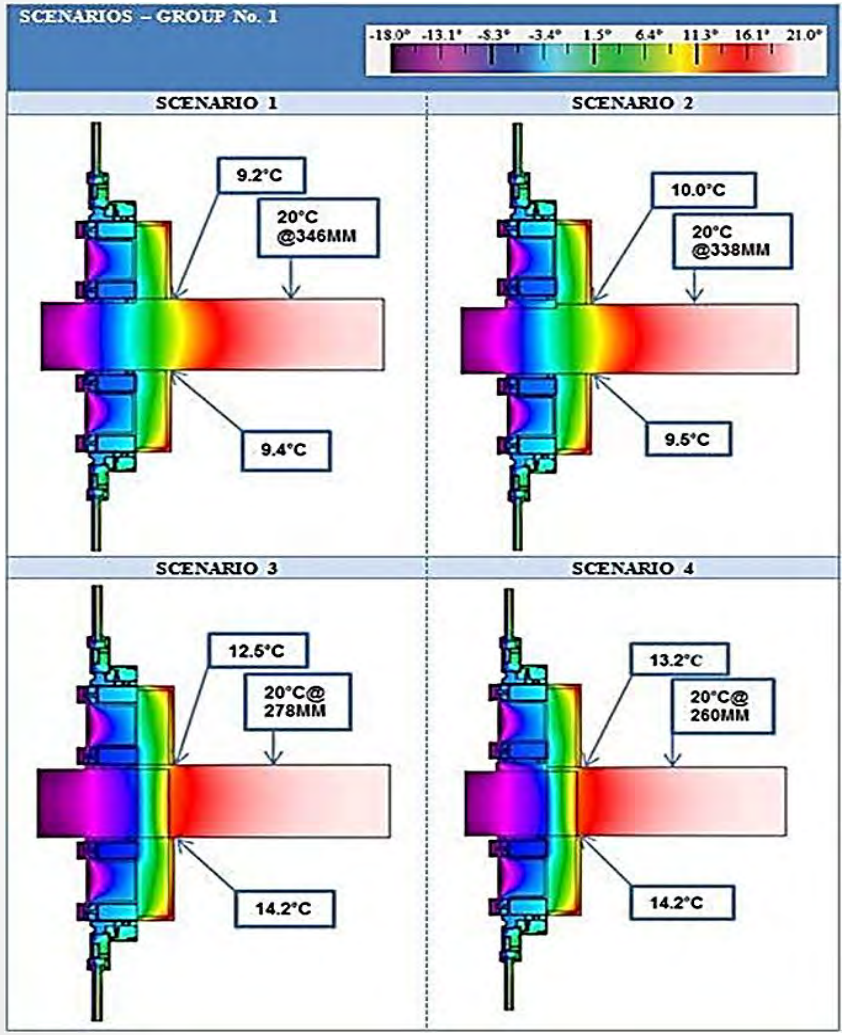

GROUP 2

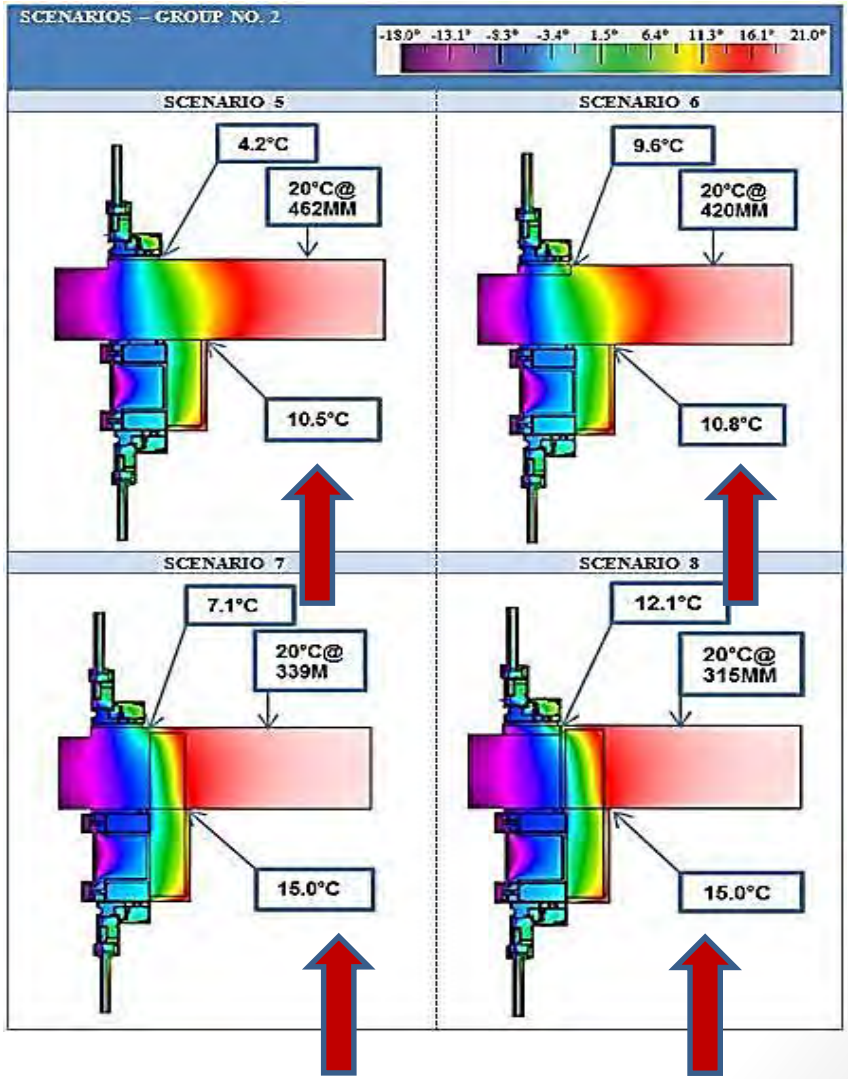

Predicted Performance of Alternate Solutions

- **RESULTS**

Scenario	Above Balcony	Below Balcony	Length Until 20° C	With Cavity Insulation	
				Above	Below
1	9.2° C	9.4° C	346 mm	9.6° C	9.7° C
2	10.0 ° C	9.5° C	338 mm	10.5° C	10.2° C
3	12.5 ° C	14.2° C	278 mm	13.7° C	15.8° C
4	13.2 ° C	14.2° C	260 mm	14.4° C	16.0° C
5	4.2 ° C	10.5° C	462 mm	4.8° C	11.3° C
6	9.6 ° C	10.8° C	420 mm	9.5° C	11.6° C
7	7.1 ° C	15.0° C	339 mm	7.0° C	16.7° C
8	12.1 ° C	15.0° C	315 mm	11.0° C	16.7° C

Impact of Alternate Solutions

❑ Balcony issues could be addressed by

- Increasing the interior concrete surface temperatures
- Decrease the length of concrete surface to reach 20°C
- Minimizing the risk of condensation

❑ Further benefits of the proposed solution

- Greater human thermal comfort
- Cost-effective & sustainable energy-efficient solution
- People could see the real value of alternative solutions

In Closing

- Impact of Proposed Alternate Solutions

- ✓ Flat and level floor
- ✓ No structural issues
- ✓ Cost effective and efficient
- ✓ Meet the energy code
- ✓ Deal with thermal comfort separately

What's Next?

- The Curb (depression) thickness could be greater than 12.7 mm. However, a larger thickness requires maintaining a concrete cover of tension bars and structural integrity of the cantilevered slab.
- Thermal analyses for two assemblies 5 & 6 by using THERM

THANK YOU

chuck.murad@Tarion.com

Questions?